1974 - 2024
50
ANNIVERSARY

HIDRACAR S.A.

We make liquids flow smoothly through pipes

BDOS catalogue for Pulsation Dampers 26.1

HIDRACAR S.A.

WE DESIGN AND MANUFACTURE:...

Bladder,
Membrane & Bellows
Pulsation Dampers
(all dismountable units)

Piston
Accumulators

Oleo-pneumatic Suspensions
for Vehicles with a High Relation
Loaded / Unloaded

Shock Absorbers

HIDRACAR S.A.

since 1974

CNC lathe with robotized loading

EXPERIENCE,
TECHNOLOGY
AND SERVICE ...

Rubber bladder vulcanizing presses

Plasma & MIG/MAG welding robot

... AT YOUR DISPOSITION

HIDRACAR S.A.
Pol. Ind. Bufalvent - c/ Ramón Farguell, 73-77
08243 Manresa (Barcelona) - ESPAÑA
www.hidracar.com • E-mail: hidracar@hidracar.com
Tel.: +34 93 833 02 52 Fax: +34 93 833 19 50

HIDRACAR S.A.

WHEN YOU BUY A

HIDRACAR

ACCUMULATOR OR PULSATION DAMPENER, YOU GET:

- **More than 50 years of experience in designing, manufacturing and applying hydro-pneumatic accumulators.**
- **A pressure vessel that meets the CE regulations.**
- **The machining precision of CNC lathes.**
- **Safety:**
  - ♦ *All our accumulators undergo hydraulic tests at 1.43 times its maximum design pressure.*
  - ♦ *Civil liability insurance coverage (CATALANA OCCIDENT Cía. de Seguros).*
- **Quality control:**
  - ♦ *We have the ISO 9001:2015 certification.*
  - ♦ *We have the Certificate of Authorization of ASME "U"*
  - ♦ *Computerised manufacturing registry control that makes possible to identify every single accumulator manufactured by us since 1976.*
  - ♦ *The charging gas valve keeps its seal up to 700 bar.*

With all the features shown above, do you still have any doubt? If so, please, contact us, we will clarify any data or give you any extra information you could need.

We remain waiting for your enquiries.

HIDRACAR, S.A. • **Pol. Ind. Bufalvent – c/ Ramón Farguell, 73-77 08243 Manresa, Barcelona (SPAIN)**
www.hidracar.com • E-mail: hidracar@hidracar.com • Tel.: +34 93 833 02 52 Fax: +34 93 833 19 50

Certificate

Standard **ISO 9001:2015**

Certificate Registr. No. 0.04.19097

Certificate Holder: **HIDRACAR, S.A.**
C/ Ramon Farguell, 73-77
08243 Manresa-Pol. Ind. Bufalvent
Spain

Scope: Design, manufacture, marketing and after sales of hydro-pneumatic accumulators, pulsation dampers, dynamometers, shock absorbers, oleo-hydraulic starters and suspension cylinders.

Proof has been furnished by means of an audit that the requirements of ISO 9001:2015 are met.

Validity: The certificate is valid from 2025-12-17 until 2028-12-16.
First certification 2019

2025-12-10

TÜV Rheinland Ibérica Inspection,
Certification & Testing S.A.
Garrotxa, 10-12 – E-08820 El Prat de
Llobregat

TÜVRheinland®

www.tuv.com

® TÜV, TUEV and TUV are registered trademarks. Utilisation and application requires prior approval.

The American Society of Mechanical Engineers

U

CERTIFICATE OF AUTHORIZATION

The named company is authorized by The American Society of Mechanical Engineers (ASME) for the scope of activity shown below in accordance with the applicable rules of the ASME Boiler and Pressure Vessel Code. The use of the ASME Single Certification Mark and the authority granted by this Certificate of Authorization are subject to the provisions of the agreement set forth in the application. Any construction stamped with the ASME Single Certification Mark shall have been built strictly in accordance with the provisions of the ASME Boiler and Pressure Vessel Code.

COMPANY:

HIDRACAR S.A.
Pol. Ind. Bufalvent C/Ramon Farguell nº 73
Manresa 08243
Spain

SCOPE:

Manufacture of pressure vessels at the above location only

AUTHORIZED: **October 14, 2024**

EXPIRES: **October 12, 2027**

CERTIFICATE NUMBER: **56636**

Gary L. Scribner
Board Chair,
Conformity Assessment

Matthew Vazquez
Senior Director,
Engineering Operations

HIDRACAR S.A.

SOME TECHNICAL AND PRACTICAL RECOMMENDATIONS ABOUT PULSATION DAMPENERS IN CIRCUITS WITH DOSING OR VOLUMETRIC PUMPS

DESCRIPTION OF A PULSATION DAMPENER AND HOW IT WORKS

A pulsation dampener is a vessel with pressurized gas inside, normally **nitrogen**. The initial filling or inflating gas pressure inside the dampener must always be lower than the pressure of the circuit where it is installed. The inflating gas pressure of the dampener will be called "$\mathbf{P_0}$".

In all pulsation dampeners there is a separator element to isolate the gas from the circuit liquid; its main function being to avoid gas leaks. This part that separates both fluids is made basically in two kinds of material: Rubber (**NBR, EPDM, FKM, butyl, silicone,** etc,...) or a thermoplastic material, usually **PTFE**. When rubber is used, the separator element is called bladder and if the **PTFE** is used the dampener can be either membrane or bellows type according to the form of the separator element. The bellows can also be made in stainless steel. The use of one type of separator or another will generally depend on the particular characteristics of the circuit, such as: the working pressure, temperature and the possible corrosive effect of the circuit liquid over the separator element. Below in **Figure 1,** are shown the ***HIDRACAR S.A.*** three different dampeners type mentioned before.

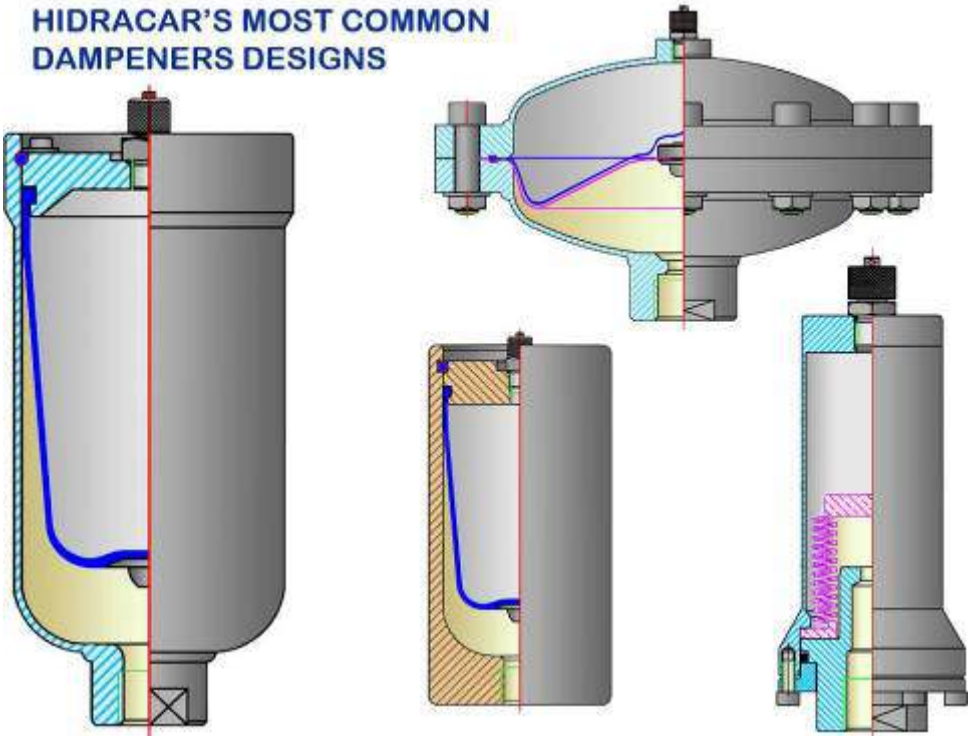

Figure 1. HIDRACAR's cost common dampeners designs. (Bladder, Bellows and membrane types)

THE FUNCTION of a pulsation dampener is to stabilize the variable and oscillating flow generated in a hydraulic circuit in each cycle by volumetric piston or membrane pumps such as dosing or metering pumps. The main function of these pumps being to deliver a constant volume of liquid in every cycle independently of the circuit resistance or pressure (we will later see the characteristics of this kind of pumps), and that's why a pulsation dampener ought to be installed.

When there is a pulsation dampener installed in the circuit, the volume supplied by the pump in every impulse or work cycle is divided in two parts; one goes to the circuit and the other part goes into the pulsation dampener. This volume stored into the dampener is returned right after back into the circuit while the pump is in its suction or chamber filling stage. The amount of liquid going in and out of the dampener in each alternating cycle of the pump will be called "**δV**".

When **δV** gets introduced into the dampener the gas contained inside will be compressed and, therefore, its volume reduced and the pressure increased. The final gas volume (**V_2**) will be the initial gas volume minus the volume of liquid introduced (**δV**).

The initial gas volume is the total volume of the dampener or the size of the dampener. The size of the dampener is an unknown value to be calculated in every case depending on the kind of pump. This volume or size of the dampener will be called "**V_0**"

From all this, we can establish that: $$V_2 + \delta V = V_0$$

Every dampener has a constant derived from its size and its filling or charging gas pressure (Boyle-Mariotte law)**:**

$$P_0 \times V_0 = \text{constant } (*)$$

(*) This law is only applicable for ideal gases. In practice, this law is not accomplished; later on we will come back to this matter.

In working practice, it is not convenient for the dampeners to get totally emptied of the liquid in each cycle. An extra volume "**v**" is recommended to avoid the anti-extrusion insert of the separator element from repeatedly hammering against the internal bottom surface of the dampener, what could wear prematurely the bladder or membrane out. A new formula results from it:

$$V_2 + \delta V + v = V_0$$

where "**v**" is a theoretical unused volume of liquid inside the dampener, it is the volume of liquid permanently stored in the dampener. As a norm this volume is considered to be **20%** of the total dampener volume, as long as the temperature remains constant, and, therefore the former formula can be expressed as:

$$V_2 + \delta V + 0.2\, V_0 = V_0 \qquad \text{and finally as:} \qquad V_0 = (V_2 + \delta V) / 0.8$$

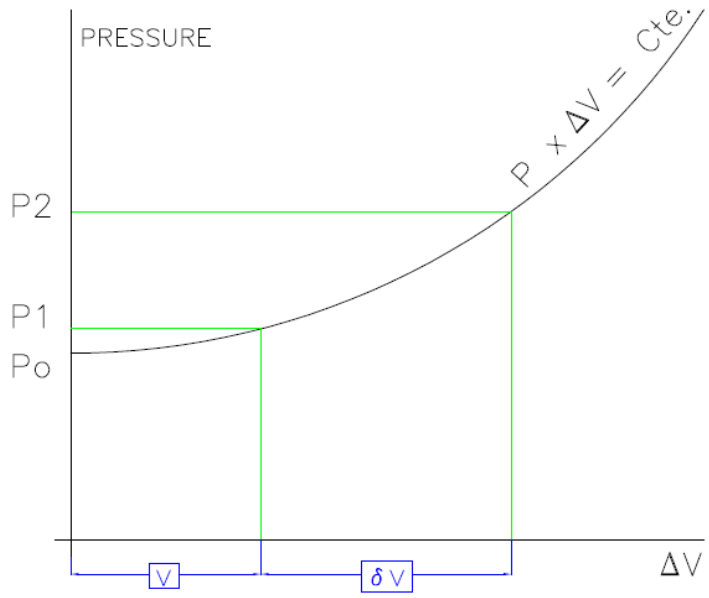

Figure 2. Graph of internal pressure in a dampeners against the volume fluctuations.

The graph in **Figure 2** represents the curve (hyperbola) of gas compression inside the accumulator or pulsation dampener. It is represented the pressure of the gas inside the accumulator against the volume fluctuations.

In the **Figure 3**, we can see the gas volume and pressure evolution at 3 stages (pre-charge, P1 and P2 which are the minimum and maximum pressures in the circuit once the pump is functioning).

At the initial gas charge pressure value "P_0" there is no liquid inside the dampener and the gas fills the whole dampener interior. The curve cuts the ordinate axis in that point where the pressure value is "Po". In the abscissa axis is represented the volume of liquid introduced into the dampener in each working cycle.

The pressure "P_1" is the gas pressure when a volume "**v**" has been introduced into the dampener. The pressure "P_2" is the value reached by the gas when the additional volume "**δV**" is introduced into the dampener.

From the curve in **Figure 2** we can deduce that for a fixed dampener size if the value "**δV**" increases then the pressure value "P_2" will also increase; or the other way around: If we increase the dampener size keeping constant the value "**δV**" the final pressure gas value "P_2" will be lower.

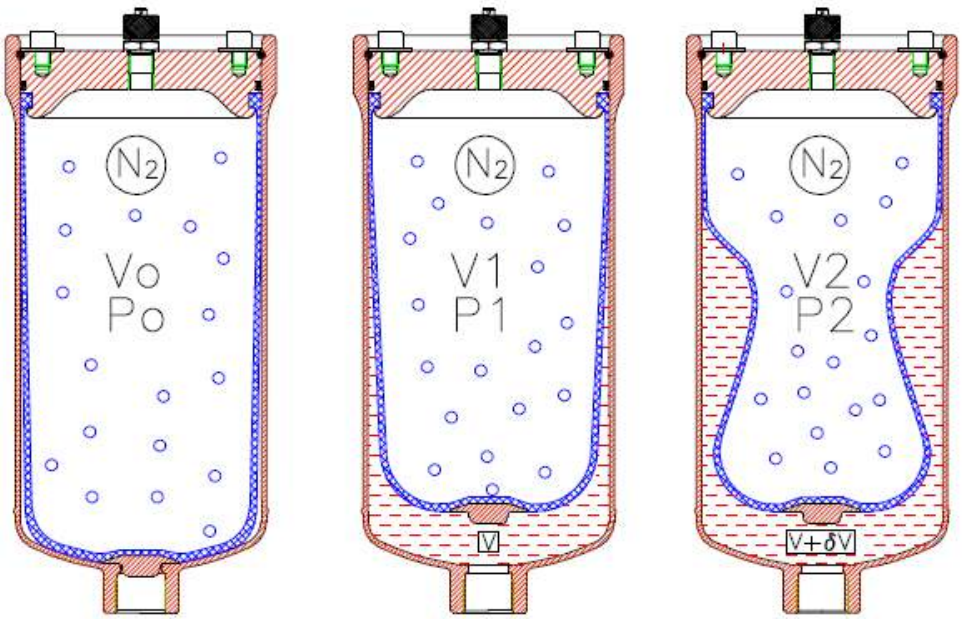

Figure 3. Bladder type dampener in its three stages or internal gas volumes

DAMPENER SIZE CALCULATION

The data needed to calculate the dampener size are:

"**δV**" = Volume of liquid that the dampener must store (in the chapter describing the different types of dosing pumps we will see the relation between "**δV**" and the cubic capacity of each of the three most common types of pumps).

"P_1" and "P_2" are the minimum and maximum pressure values that are accepted in the circuit.

Note: A pulsation dampener does not eliminate 100% of the pressure oscillation produced in the circuits with volumetric or dosing pumps. Its function is to regulate or control the variations of pressure so it remains within previously set limits. This variation, as a +/- percentage of the theoretical pressure "P_t", *is what determines, together with the value of* "**δV**", the size of the pulsation dampener.

"P_t" is the pressure needed at the pump outlet, in order to overcome all the resistances that will arise, to circulate the liquid all the way to the end of the hydraulic circuit.

Let's see an example: If the theoretical or work pressure in a circuit is "P_t" and the residual pulsation admitted is **+/- 5%** of this pressure, values P_1 and P_2 will be:

$$P_1 = P_t - (5/100) \times P_t \quad \text{and} \quad P_2 = P_t + (5/100) \times P_t$$

With all this known data: **δV**, $\mathbf{P_1}$ and $\mathbf{P_2}$, we can already calculate the dampener size "$\mathbf{V_0}$".

The ideal gas law in isothermal conditions (Boyle's law) (later on we will clarify this equation for this application) gives us the following equality:

$$P_0 \times V_0 = P_1 \times V_1 = P_2 \times V_2 = \text{Constant}. \quad (1)$$

If: $V_1 = V_0 - v$ and $v = 0.2 \times V_0$

we have: $V_1 = 0.8 \times V_0$ (2)

and also: $V_2 = V_1 - \delta V$ (3)

Finally, from (1) and (2) we obtain: $P_0 = 0.8 \times P_1$ (4)

and then from (1), (2), (3) and (4) we will get:

$$P_0 \times V_0 = P_2 \times V_2 \; ; \quad 0.8\, P_1 \times V_0 = P_2 \times (V_1 - \delta V) = P_2 (0.8\, V_0 - \delta V)$$

From the underlined ends of the equalities we obtain the final formula:

$$V_0 = \frac{P_2 \times \delta V}{0.8\,(P_2 - P_1)} \quad (5)$$

This is the simplified theoretical formula to calculate the pulsation dampener volume as a function of **δV**, $\mathbf{P_1}$ and $\mathbf{P_2}$.

As we have already said, it is accepted as a norm that the charging gas pressure, "$\mathbf{P_0}$" **= 0.8** $\mathbf{P_1}$. This difference between $\mathbf{P_0}$ and $\mathbf{P_1}$ prevents the complete emptying of liquid from the dampener in each work cycle. Having this extra quantity of liquid **"v"** (stored in the dampener in between $\mathbf{P_0}$ and $\mathbf{P_1}$) can also be used to compensate, in some instances, the potential changes in the gas pressure produced by variations in the exterior temperature that would modify the calculated theoretical "**δV**" and in that case it could not be completely introduced into or discharged out of the dampener.

The former equality (1) $P_0 \times V_0 = P_1 \times V_1 = \ldots = P_n \times V_n$ does not comply in practice because, when a volume of gas is compressed (in a short time), the temperature rises, what increases the pressure, and when a gas expands its pressure drops an extra value because the temperature is reduced (refrigerator effect). This effect happens with the majority of gases, included Nitrogen and air, which are the more commonly used for charging the dampeners (atmospheric air can be used for pressures below **10 bar**, providing there is no risk of chemical reaction between the Oxygen in the air and the pumped liquid).

The formula (1) gets, thus, transformed into:

$$P_0 \times V_0^{\gamma} = P_1 \times V_1^{\gamma} = \ldots = P_n \times V_n^{\gamma} \quad (6)$$

where **γ** = specific heat ratio of the gas at constant pressure and volume, respectively. For ideal diatomic gases (N_2), **γ = 1.4** This constant is also theoretical.

We can obtain from both formulas (5) and (6), the **Vo** as a function of the residual pulsation.

If we consider **Θ= ± residual pulsation (%) / 100**

From (5). Isotherm curve

$$V_0 = \frac{1 + \Theta}{1{,}6\Theta}\, \delta V \quad (5.1)$$

From (6). Adiabatic curve

$$Vo = \frac{1}{\left(\frac{0.8}{1-\theta}\right)^{1/\gamma} - \left(\frac{0.8}{1+\theta}\right)^{1/\gamma}}\, \partial V \quad (6.1)$$

If we divide the above formulas (5.1 for Isotherm curve) divided by (6.1 for Adiabatic curve), we obtain a relation **K** which is function of the residual pulsation **Θ**. For low values of admissible residual pulsations (below +-5%), the value obtained is practically constant (**K=0,8).** So, we will incorporate the factor **K** in the formula (5), to take in consideration the adiabatic expansion and compression of the gas inside the dampener:

$$V_0 = \frac{P_2 \times \delta V}{0.8 \times 0.8 \times (P_2 - P_1)} \qquad (7)$$

This formula can be used in practice for nearly all industrial applications. It will be very unlikely for the volumes given by this formula to fit any standard dampener volume size from a manufacturer. Except for very exigent applications we can recommend to use the manufacturer's standard closer lower size, favouring cost efficiency.

Note: We have not considered a possible temperature variation of the fluid or environment. This would change the charging gas pressure value at 20º (take note that for each 10ºC variation in temperature the gas pressure will change approximately by 3%).

DIFFERENT TYPES OF DOSING PUMPS TO WHICH A DAMPENER CAN BE MOUNTED

We will consider pumps with one, two or three pistons and crankshaft movement being these the most extended and used and also those in bigger need for a dampener (for air operated, peristaltic, etc... pumps please consult ***HIDRACAR S.A.*** technical department).

The graphics below in **Figure 4** corresponds to these three types of piston pumps and represent the instantaneous flow during a complete crankshaft revolution. We have taken the same piston dimensions (diameter x stroke) for all three types of pumps.

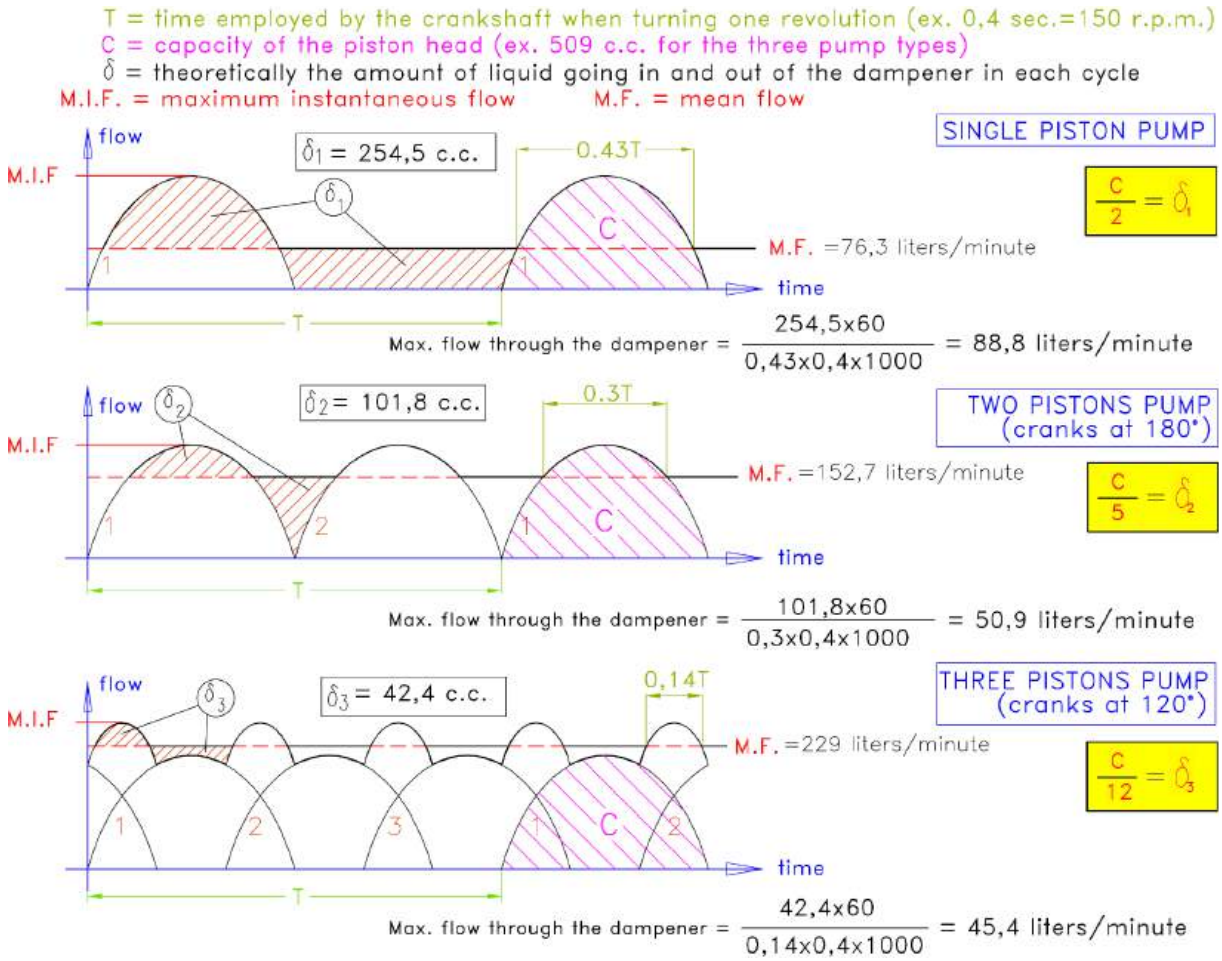

Figure 4. Graph for the instantaneous flow evolution in different pump types. From up to down: 1 piston pump, 2 piston pumps, 3 piston pumps (all of them single acting)

The curves in **Figure 4** let us see how a pulsation dampener works: If we pay attention to the first curve (on the top), representing a single piston pump, we can observe that for this type of pump the use of a dampener is almost essential, as otherwise during half revolution of the pump crankshaft no liquid flow is delivered. Also if the pump does not include a dampener, the diameter of the pipe must be calculated for the maximum instantaneous flow, which takes place when the piston speed is also at its maximum, in the middle of piston stroke (the flow curve is a sinusoid).

With a dampener installed in the pump outlet, the circuit flow will became practically constant. Hence, the pipe diameter downstream the dampener can be designed considering the mean flow. It makes possible to reduce the pipe diameter **by approximately 40%!!** And this because the maximum instantaneous flow of the pump is **2.8** times superior to its mean flow. In some cases this reduction of pipe diameter will compensate the cost of the dampener; furthermore the dampener will stabilize the circuit's pressure, with all of its obvious associated improvements (pressure in a hydraulic circuit is, basically, a function of the flow and losses of head).

Carrying on with the first curve in **Figure 4**, we can see that the task of the dampener is to store all the excess volume over the mean flow line. It occurs during the piston head impulse stroke; and then this volume "δ_1" is returned back into the circuit during the piston suction stroke. So then, in this type of pump the volume stored by the dampener is half of the pump head or capacity per revolution.

As we analyse all three curves in **Figure 4**, we can see that, as the number of pistons in a pump increase, the mean flow gets closer and closer to the maximum instantaneous flow and the liquid volume "δ_1" stored by the dampener gets correspondingly reduced, and therefore the required size of the dampener also gets reduced (this is totally valid in a case like this, where all the pistons in the three pumps have the same diameter, stroke and number of revolutions per minute).

The relation between "**δV**" and the capacity per head "**C**" is

δv = C / 2 For a one piston pump
δv = C / 5 For a two piston pump
δv = C / 12 For a three piston pump

(Practical values for the calculation of the dampener size).

We know that when a gas is compressed its pressure increases, and decreases if it expands its volume. When a dampener is installed in the outlet of a piston pump, the pressure of the liquid in the circuit will fluctuate according to the values of the volume of gas inside the dampener. This pressure variability (a +/- percentage of pressure P_t) will be defined by the technical designer of the circuit or by final customer requirements.

The following graphs in **Figure 5** will help to better understand the above exposed:

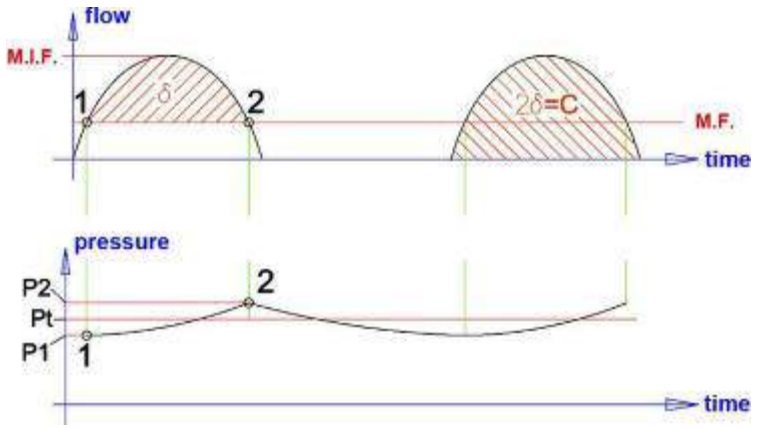

Figure 5. Pressure evolution in 1 piston pump complete cycle with the installation of a pulsation dampener.

Before all, let's consider that for the mean flow (M.F. in the graph) corresponds the working pressure "$\mathbf{P_t}$". When the pump is in its impulsion cycle and the instantaneous flow increases and achieves the point 1 in the graph of the **Figure 5**, the dampener starts to store liquid (see in the top graph which represents the instantaneous flow delivered by the pump and the lower graph where the pressure variability with the use of a dampener is represented). The dampener ought to be charged at the adequate inflating pressure (80% of the working pressure). In the point **1** the damper starts to store liquid, in the point **2** the damper is full of liquid (all "**δV**" has been introduced in the damper). In the pump suction stroke, the damper discharges the volume "**δV**" previously stored.

The lower curve of the **Figure 5** shows the pressure fluctuation of a circuit with a dampener installed. This curve relates to the pump flow variation curve. As we have seen before, a dampener stores the volume of liquid above the pump mean flow. For this reason, the minimum value of the pressure curve (point **1**) must coincide with the first crossing point of the instantaneous flow curve with the line of the mean flow (the time where begins the liquid storage inside the dampener); and the maximum value of the pressure curve (point **2**) must coincide with the second crossing point between them (the time where finishes the liquid storage inside the dampener), in between these 2 points all the stored volume "**δV**" has been introduced inside the dampener.

Let's remember that the area comprised between the instantaneous flow curve and the abscissa axis (time) in Figure 5 top graph represents a volume which in the case of a single piston pump is equal to the pump capacity per stroke or revolution. (flow x time = volume) .

Let's see now the meaning of $\mathbf{P_1}$, $\mathbf{P_t}$ and $\mathbf{P_2}$ in the pressure / time curve of **Figure 5**:

In all hydraulic circuits the pressure at the pump outlet port is a function of the flow, pipe length and diameter, viscosity of the pumped liquid, internal pipe surface roughness, geometric height, etc... If the flow keeps constant over time, the pressure needed to pump the liquid will also be constant as long as there is no change either in flow resistance (for instance, due to sedimentation on filters, etc...) We call this constant working pressure or "$\mathbf{P_t}$".

When designing a circuit, the mean flow and the opposing resistances shall be considered to calculate the pressure "$\mathbf{P_t}$".

We have seen that the dampener stabilizes the flow and in fact also the pressure, the pressure in the circuit with a pulsation dampener installed varies from "$\mathbf{P_1}$" to "$\mathbf{P_2}$". The reason behind this is that the dampener has to stabilize the flow and for that it needs to compress and expand a volume of gas, and these pressure variations in +/- percentage of $\mathbf{P_t}$ are those that regulate the values accepted in the circuit.

We have already seen that this pressure fluctuation can be reduced to very small values by increasing the volume of the dampener. "$\mathbf{P_1}$" and "$\mathbf{P_2}$" are the minimum and maximum pressures in the circuit and can be expressed as a percentage value of "$\mathbf{P_t}$". The end user or the circuit designer shall determine the admissible values of "$\mathbf{P_1}$" and "$\mathbf{P_2}$" or in fact the admissible residual pulsation in the circuit**.** We don't recommend them to be less than +/- 2%, as the environmental temperature conditions will very probably modify the theoretical calculation.

MOUNTING SUGGESTIONS FOR MAXIMUM DAMPENER EFFICIENCY

As we have seen so far, taking into consideration the flow curves for the three types of pump (flow curve graphs in **Figure 4**), the single piston pump is the pump with the higher "**maximum instantaneous flow / mean flow**" ratio and also the one with highest liquid fluctuation inside the dampener in each cycle, "**δV**" if we consider the same piston diameter and stroke length for all three pumps. Therefore in the next example we will refer to the one piston single acting pump.

We can assume that for **99%** of industrial applications, if the recommendations that we detail below are followed, the dampener's efficiency will be guaranteed.

For pulsation dampeners with one (1) unique connection port, ***HIDRACAR S.A.*** recommends installing the dampener with its axes aligned with the pipe discharge line, and the rest of the pipe downstream the dampener in a T derivation, see next **Figure 6**.

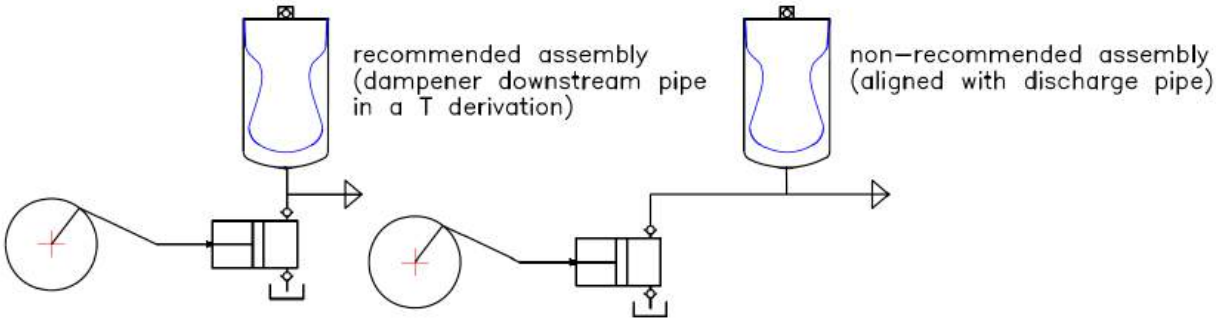

Figure 6. Scheme for the recommended installation of a discharge pulsation damper with one (1) single connection port.

1.- The dampener must be mounted with its axis aligned with the axis of the pump outlet.

2.- The distance between the pump outlet port and the dampener port connection must be as short as possible.

3.- The pipe section between the pump and the dampener connection must be calculated for the pump maximum instantaneous flow.

4.- The remaining pipe section downstream the pulsation dampener shall be conducted with a T derivation. This dampener downstream pipe must be calculated for the mean flow.

In the scheme of **Figure 7** we will see more clearly all the concepts we have exposed so far.

ω : Pipe section for the mean flow.
Ω : Small length of pipe section for the maximum instantaneous flow.
Q : Maximum instantaneous flow.
q : Mean flow.
L : Distance between pump and dampener, as short as possible.

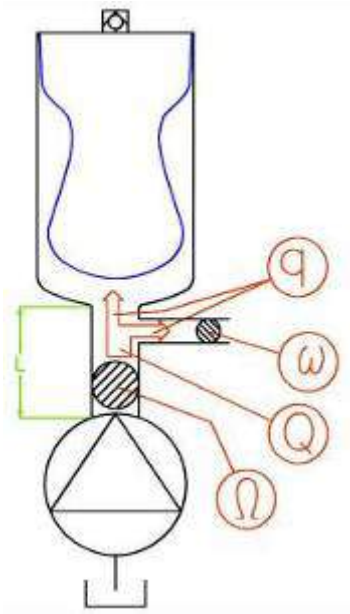

Figure 7. Scheme of the main parameters involved in the in-line assembly of a pulsation dampener.

In order to illustrate the difference between the two pulsation dampener installation schemes in **Figure 6** into a circuit, and the higher efficiency that represents installing the pipe downstream the dampener in a T derivation, we will remember some fluid mechanics principles:

The flow of a liquid inside a pipe follows different speed lines. In the centre of the pipe the velocity is maxim while it becomes nearly to zero close to the pipe inner wall (see next drawing). If the mean liquid velocity increases, the difference between dynamic pressure (pressure measured in the liquid movement direction) and static pressure (pressure measured perpendicular to the liquid movement direction) also increases.

The scheme of **Figure 8** reflects this phenomenon: dynamic pressure reading (B) is the higher pressure and it is achieved in the dampener connection port of recommended installation (**Figure 6 left**); static pressure reading (A) is the lower pressure and it is achieved in the dampener connection port of non-recommended installation (**Figure 6 right**).

In fact, the alignment of the flow with the dampener connection port facilitates the entrance of the liquid in the damper due to its higher dynamic pressure. *(Note: We assume the fluid circulates in a laminar regime)*

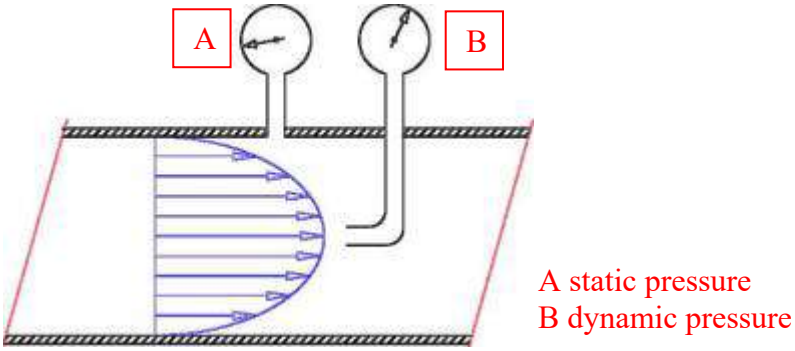

Figure 8. Scheme of the dynamic pressure in a pipe cross section

If the dampener is far from the pump outlet, the efficiency of the dampener will be reduced a great deal. And if on top of this, the dampener having one (1) single connection port is installed aligned with the pipe (as per scheme of **Figure 6 right**) and the pipe derivation conducting to the dampener have a smaller diameter than the main circuit pipe, then the effect of the dampener will be negligible.

HIDRACAR S.A. has available different IN-LINE solutions for pulsation dampeners with flow passing through (see on scheme of **Figure 9**). Those designs are specially indicated for those applications which require an installation as per scheme in **Figure 6 right** (for example: horizontal discharge pipes, collectors of multi headed pumps, etc).
In those dampeners, all the circuit flow passes through the dampener interior. Those dampeners have been specially designed to improve the dampening efficiency when installed aligned with the discharge piping.

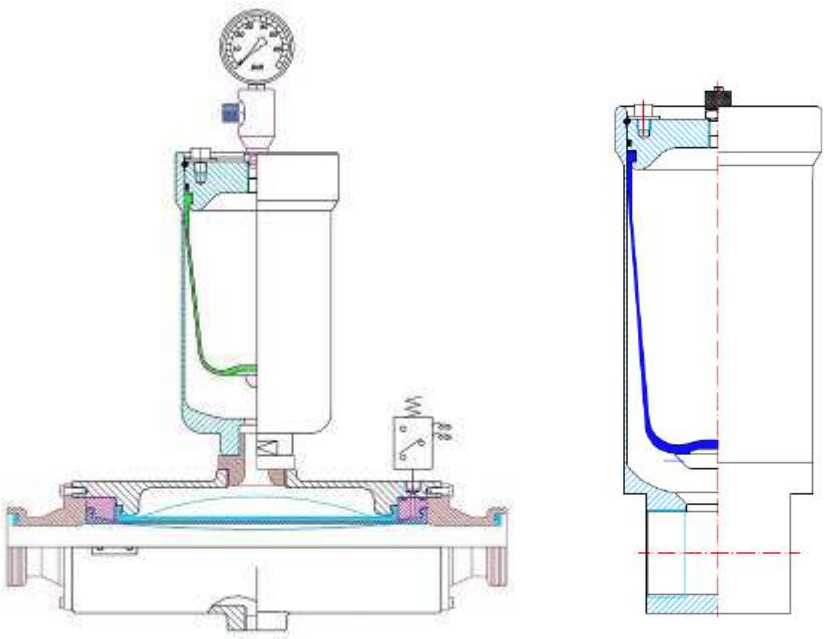

Figure 9. On the left, IN-LINE hygienic dampeners. On the right, BLADDER dampeners with 2 connection ports

WARNING¡: It is of utmost importance that the pulsation dampener hole passage must be as similar as possible than its connection port and the pipe section. Any reduction in the diameter of the hole passage, in dampeners installed in low pressure circuits, will greatly reduce the performance and efficiency of the dampener.

SOLUTION TO PROBLEMS OF PARTICULAR PULSATION DAMPENER APPLICATIONS

I) CIRCUITS THAT HAVE TO BE CLEANED PERIODICALLY AT THE END OF EACH PROCESS

Our NEW IN-LINE tube pulsation dampers (see on scheme of **Figure 9**), thanks to its special design without corners, can be cleaned in place using CIP processes (a cleaning agent is pumped in the circuit at certain pressure and temperature to clean all pipes and wetted elements in the circuit).

All the rest of pulsation dampers, though certainly some more than others, have internal corners which are hard to reach and difficult to clean or totally eliminate the residues of the pumped product with a CIP process.

The most reliable, low cost and efficient solution to this problem, in accordance with our longer than 45 years experience, is to use our quick dismantling system for bladder dampeners, to extract the bladder out of the dampener, and then clean separately both the bladder and the interior of the dampener body. In the case of applications where the charging gas pressure is lower than **10 bar** and compressed air can be used to fill the dampener, it is the most effective solution. ***HIDRACAR S.A.*** has designed a quick bladder dismantling system that makes unnecessary any additional tool.

If for whatever the reason, dismantling the bladder is not possible, we recommend the pressure of the cleaning liquid to be higher than the pumping pressure of the process product. That way the bladder or membrane will be more compressed, allowing a better access of the cleaning fluid in the internal corners in between the bladder/membrane and the dampener inner wall.

II) CIRCUITS WITH A VARIABLE WORKING PRESSURE

The problem arisen by the application of dampeners to this type of circuits has different solutions. But also in this case the experience has shown us that the best solution is, as always, the simplest one, or at least the solution requiring a lower implementation and maintenance cost and no extra energy.

Let's consider the following example: A circuit that must work at an initial pressure of **20 bar** and a final pressure of **200 bar**, with a **δV = 15 c.c.** and an admissible residual pulsation at **200 bar** of **+/- 5%** (*). The pump type is 1 piston single acting and its capacity per stroke is: **30 c.c.** To simplify the calculations we will consider that the gas volume variation takes place at a constant temperature (isothermal curve complying with **P x V = Constant**).

((*): At 20 bar the residual pulsation will be much lower because, as shown below, the dampener size is calculated for the maximum circuit pressure and therefore when the circuit is working at the minimum pressure - here, 20 bar - the gas inside the dampener will expand and consequently the residual pulsation will decrease from the +/- 5% initially admitted).

Since: $P_2 \times V_2 = P_0 \times V_0$ $\quad P_0 = 0.8 \times 20 = 16$ bar $\quad P_2 = 200 + 5\% = 210$ bar

$$P_2 / P_0 = V_0 / V_2 = 210 / 16 = 13.13 \quad (8)$$

We will calculate the volume of a hypothetical dampener for the maximum pressure of **210 bar**.

$$V_0 = (210 \times 15) / [0.8 \times 0.8 \times (210 - 190)] = 246.09 \text{ c.c.}$$ (from formula (7) in page 4)

(at 200 bar)

This volume is equivalent to "V_2" from the equality (8), and consequently:

$$(210 / 16) = (V_0 / 246.09) = 13.125$$

and $$V_0 = 246.09 \times 13.125 = 3{,}229.98 \text{c.c.}$$

This is in theory the total dampener volume necessary for this application; nevertheless, the ratio, V_0 / V_2 cannot be higher than **4** (In bladder type dampeners. The value will be different in other design types of dampener. Please, consult ***HIDRACAR S.A.*** technical department for further details on the particular) in order not to wrinkle the bladder excessively, what could tear it prematurely. In our example, we have a ratio V_0 / V_2 of **3,229.98 / 246.09 =13.125**, more than **3** times higher than the value of **4** that we have just recommended.

To avoid exceeding this ratio of **4:1**, a certain amount of liquid must be introduced inside the bladder together with the gas (usually the same liquid of the circuit or any other unable to react with either the bladder material or with the circuit liquid). Again, in our example this volume of liquid which has to be introduced into the bladder, **"V_L"** (see the scheme in **Figure 10**), is calculated:

$$(3{,}229.98 + V_L) / 246.09 + V_L) \leq 4 \quad \text{and operating:} \quad V_L = 748.54 \text{ c.c.}$$

The total dampener volume needed will be: **3,229.98 + 748.54 = 3,978.52c.c.**

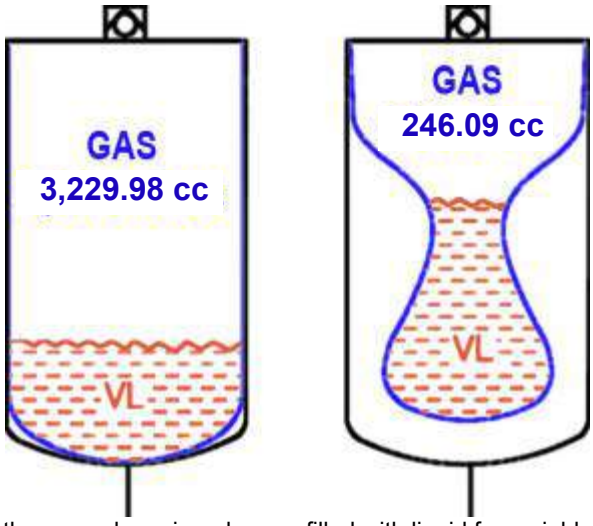

Figure 10. Scheme of the gas volume in a damper filled with liquid for variable pressure applications.

WHEN TO INSTALL A PULSATION DAMPENER AT THE SUCTION INLET OF A VOLUMETRIC PISTON PUMP TYPE OR SIMILAR DOSING PUMPS

As already said, volumetric pumps are used to dose with precision a constant volume of liquid. And therefore, the pump must get completely filled in every suction stroke piston displacement cycle.

When in the liquid inlet port of the pump the pressure can easily overcome the resistance of the suction valve spring that all pumps have (we can assume that it happens when the pressure at the inlet port to exceeds the resistance of the valve spring more than 3 bar) and the section of the suction pipe is about twice the discharge section of the pump, it won't be necessary to install a pulsation dampener at the suction inlet.

If the static pressure of the liquid at the pump inlet is low (below the already mentioned 3 bar) the suction pipe is long enough (longer than 3 to 5 metres from the suction liquid supply tank to the pump inlet) and also the liquid has a low vapour tension at the working temperature then a phenomenon called "**cavitation**" could take place.

When this anomaly takes place, the pump could suction a mix of liquid and its vapour. When this mixture (liquid and vapor) is compressed during the pump discharge cycle causes the condensation of the vapour because of the pump impulsion pressure. Consequently there is a reduction in the volume delivered in the outlet of the pump and witch performance loses efficiency. This effect, which can be detected by a soft explosion-like sound, reduces considerably the life of the pump, which also stops providing the required dosing.

In order to eliminate this problem it is necessary to prevent the pressure at the pump inlet port to be lower or close to the vapour tension of the liquid. And a condition for this, other than having enough pressure, is to avoid the suction pipe liquid column to be subjected to accelerations and decelerations caused by the operation of the pump.

It is precisely, **and exclusively to avoid these fluctuations in the liquid column** (accelerations and decelerations) at the suction pipe, **that a pulsation dampener is needed at the suction** of volumetric or dosing pumps in the above mentioned situations.

The pulsation dampener installed at the suction of the pump fulfills the same task as the one installed at the discharge: To keep the velocity of the liquid as constant as possible; and therefore, its pressure. If the low pressure of the liquid at the suction does not experiment any substantial drop, the possibility of reaching the vapour tension of the liquid will decrease and the main cause for the appearance of "**cavitation**" will be eliminated.

The pulsation dampener will not be able to avoid the "**cavitation**" phenomenon if all its determinants are present; and therefore it is convenient, when a risk exists, to install an auxiliary centrifugal or similar pump, or else, to raise the liquid supply tank or pressurize it and this way increase the pressure at the inlet port of the dosing pump.

If all these recommendations can't be applied, there is the possibility of installing the pulsation dampener to try to avoid the appearance of the "**cavitation**" effect. For this it is specially recommended that:

The size or volume of the dampener installed at the suction must be approximately twice as much as for the one installed at the discharge.

The size of the connection port of the dampener shall be as similar as possible as the diameter of the suction pipe.

The dampener must be installed as close as possible to the pump liquid inlet port, with the least possible pipe length in between.

If the suction pressure in the pump inlet is lower than atmospheric pressure (< 1 bar), then the gas volume inside the suction damper shall be reduced. When the dampener is delivered, the bladder must be compressed with hands with internal pressure of 1 bar.

*Currently **HIDRACAR S.A.** has designed a very effective in-line bladder damper (see in our BDOS catalogue ref. BLADDER IN LINE S.S.LOW PRESSURE PULSATION DAMPENERS), that can be considered the unique suction dampener with efficiencies nearly to 100%.*

For further detail explaining about the above exposed, please, contact ***HIDRACAR S.A.*** technical department.

We have written this paper in the modest hope of helping any people interested in these devices to understand the applications of the hydro-pneumatic accumulators used as pulsation dampeners. If it results useful to anyone, we will feel satisfied and rewarded for the time and effort spent in the making.

10th rev., April 2022

Manuel Carcaré Gimeno
Technical Director & ***HIDRACAR S.A.*** founder
In collaboration with:
Eduard Cortina Ruiz
Manager Assistant in ***HIDRACAR S.A.***

HIDRACAR S.A.

ADVANTAGES AND DRAWBACKS OF USING PULSATION DAMPENERS EITHER WITH OR WITHOUT SEPARATOR ELEMENT BETWEEN FLUIDS (GAS / LIQUID)

As we already know, the volumetric or dosing pumps manage to supply a constant volume in time, but produce an oscillating and variable flow in pumps with a crankshaft movement.

As already exposed in our article *"Technical and practical considerations on the use of pulsation dampeners in circuits with volumetric or dosing pumps"*, this oscillating flow supply effect is more significant in the case of single-piston pumps; and it is in this type of pumps where the installation of a pulsation dampener becomes more useful and necessary, both at the discharge and the suction.

In some cases there is the tendency to install at the suction a dampener without a separator element between the pumped liquid and the atmospheric air inside the dampener. We understand that this solution creates a major problem that we will try to explain.

When the dampeners without separator are used at the discharge, the problem gets reduced in part.

Let's see which are the main problems of installing such a pulsation dampener at the suction of the pump:

I) It must be always mounted upright and must be filled with the pumped liquid at least to half of its volume, leaving the remaining volume for atmospheric air. This is a hazardous operation if the liquid is corrosive, as it must be performed on site.

II) The usual problem, but even more pronounced at the suction: The atmospheric air gets dissolved as time goes by, so it becomes necessary to proceed as in (I). But, ABOVE ALL, the dissolved air reduces the dosing of the liquid the pump is providing. The pump chamber gets full of liquid and dissolved air bubbles. These bubbles, which on entering the pump have a non-negligible size, as they could be slightly below the atmospheric pressure, when the pump starts the discharge and the pressure rises get compressed, what reduces the volume of the pump head and consequently an effect akin to CAVITATION happens (*).

(*): The volume freed by the reduction of the size of the air bubbles, is filled by the pumped liquid vapour and if this circumstance does not occur the problem gets worse.

III) Comparative analysis of volumes and costs of the dampeners with and without a separator between fluids (air / liquid):

DATA OF A HYPOTHETICAL CASE (simple-effect membrane pump)

Q = 5 L/min. at 100 r.p.m.
Pumping pressure: 4 bar-g
Suction pressure: 1 bar-g
Residual pulsation admitted at the discharge: +/- 6%
Residual pulsation admitted at the suction: +/- 3%

THEORETICAL CALCULATIONS ON THE VOLUME OF THE DAMPENER AT THE DISCHARGE

With separator (bladder, membrane, bellows):

∂V = (5 / 100) / 2 = 0.025 litres ≡ 25 c.c. (this is the volume that gets in and out of the dampener in each pump cycle.

V_0 = (∂V x P_2) / [0.8 x 0,8 x (P_2 – P_1)] = (25 x 4.24) / (0.64 x 0.48) ≈ 345 c.c. (this is the total volume of the dampener).

P_2 = Working pressure plus percentage of residual pulsation =
= 4 + (6 x 4 / 100) = 4.24 bar

P_1 = Working pressure minus percentage of residual pulsation =
= 4 – (6 x 4 / 100) = 3.76 bar

Without separator:

V_0 x 1 at = V_1 x P_1 = V_2 x P_2

V_2 = Volume of atmospheric air inside the dampener when compressed at P_2 pressure

P_0V_0 = 1 at x V_0 = P_1V_1 = P_2V_2;

V_1 – V_2 = ∂V = 25 c.c., V_1 = 25 + V_2;

P_1 x (25 + V_2) = P_2 x V_2;

(3.76 x 25) + 3.76 x V_2 = 4.24 x V_2;

V_2 x (4.24 – 3.76) = 3.76 x 25;

V_2 = 94 / 0.48 ≈ 195.8 c.c.

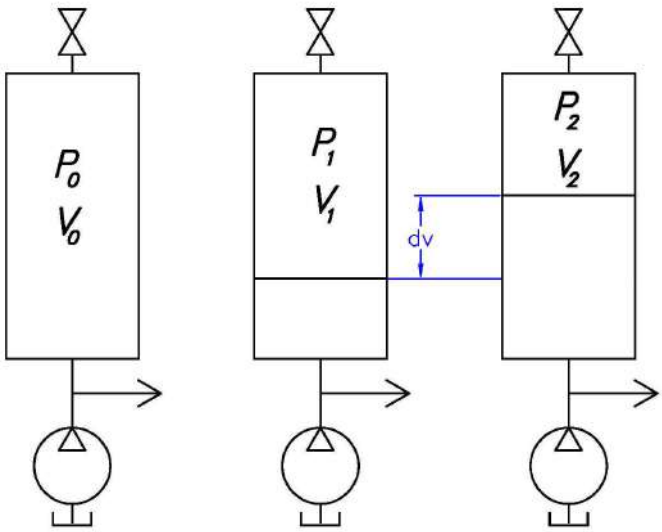

V_0 x 1 at = P_2 x 195.8 = 4.24 x 195.8;
V_0 = (4.24 x 195.8) / 0.8 ≈ 1,038 c.c.!!;
1,038 / 345 = 3 times the volume of the dampener without separator compared to the dampener with separator!!!

NOTE: The higher the working pressure, the bigger the size of the dampener without separator.

CALCULATIONS OF THE DAMPENER AT THE SUCTION

With separator:

$V'_0 = \partial V \times P'_2 / (0.8 \times 0,8 \times (P'_2 - P'_1)) = (25 \times 1.03) / (0.64 \times 0.06) = 670.58$ c.c.
$P'_2 = 1 + [(3 \times 1) / 100] = 1.03$
$P'_1 = 1 - [(3 \times 1) / 100] = 0.97$

Without separator:

$P'_1 \times (25 + V'_2) = P'_2 \times V'_2$;
$(0.97 \times 25) + 0.97 \times V'_2 = 1.03 \times V'_2$;
$0.06 \times V'_2 = 0.97 \times 25$;
$V'_2 = (0.97 \times 25) / 0.06 \approx 404.16$
$V'_0 \times 1$ at $= P'_2 \times 404.16$;
$V'_0 = (1.03 \times 404.16) / 0.8 = 520.36$ c.c.

The volume of the dampener must be at least twice the calculated value in order to get the initial level of the liquid as far from the dampener connecting port as possible. Therefore, this volume would be 520.36 x 2 = 1,040.72 c.c.

Summarizing:

The main drawback of not using pulsation dampeners with separator, either at the suction or the discharge, is the dissolving of the air inside the dampener into the liquid and the need for stopping the pump regularly to refill the dampener with atmospheric air; with the recurrent hazardous exposure in case of pumping corrosive chemicals.

But above all, in the application of the dampener without separator at the suction of the pump, the dissolving of air into the liquid can create cavitation and a deficient dosing.

The use of dampeners without separator, either at the suction or the discharge, will require dampeners with a bigger size than those needed if fitted with a separator.

FEBRUARY 2019

HIDRACAR S.A.

UNQUESTIONABLE BENEFITS OF INSTALLING A PULSATION DAMPENER AT THE DISCHARGE OF SINGLE-EFFECT DOSING PUMPS

As we have already seen, all single effect dosing pumps does not supply any flow during the filling or suction cycle of the pump. This means that at the end of such cycle, the pumping pressure has been reduced to “zero”. The liquid column inside the discharge pipe has stopped.

On starting the course of discharge or the exiting of the liquid from the pump, the liquid column must overcome:

a) The inertia of the mass of the liquid that has stopped.

b) The resistances that are generated in the circuit against the movement of the liquid. These resistances are:

I) Geometrical height.

II) Head loss.

CONSEQUENTLY, the pressure at the outlet of the pump goes from “zero” to a pressure generated by resistances *a* and *b*.

This variation of pressure, from “zero” to a maximum value, creates the following problems:

- Fatigue of the material of the pump mechanisms, piping, filters, flow meters, threaded or flanged couplings, etc…
- Vibrations that end up producing leaking of the liquid at the couplings.
- The impossibility of getting a precise reading of the flow meter.

All this shows how necessary is the installation of a pulsation dampener to avoid all the problems that have been exposed. As the dampener procures a more constant flow in the pipe, it is possible to calculate more accurately its section and it always results in a diameter reduction. This alone already redeems in part the extra cost assumed on installing the dampener.

Let’s see now how we can reduce to a certain extent the cost of the dampener.

As we already know, every time the size of the dampener must be calculated it is necessary to know the residual pulsation percentage that can be admitted or tolerated in the circuit. The final customer always tends to reduce this value when asked about, even though in most cases it is not necessary to adjust it to such tight values. In any case the pumping pressure must always be taken into account (it is not the same a wide percentage for a low pressure, say 6 bar than for a pressure of 200 bar or higher).

A simple illustration will make evident the reduction in the size of the dampener, just increasing slightly the percentage of residual pulsation (for a single piston pump):

If the pump head: 50 c.c.
The pumping pressure is: 6 bar
The initial residual pulsation is: +/- 4%
The size of the dampener will be:

$V_0 = (\partial V \times P_2) / 0.64 \times (P_2 - P_1) = (25 \times 6.24) / (0.64 \times 0.48) = 498.29$ c.c.
V_0 = Dampener size.
∂V = Volume of liquid the dampener will store and return = pump head / 2 (for single piston or membrane pumps)
$P_2 = 6 + (4 \times 6 / 100) = 6.24$ bar
$P_1 = 6 - (4 \times 6 / 100) = 5.76$ bar

<u>If we take a pulsation % of +/- 8%</u>

$P'_2 = 6 + (8 \times 6 / 100) = 6.48$ bar
$P'_1 = 6 - (8 \times 6 / 100) = 5.52$ bar
and $V'_0 = (25 \times 6.48) / (0.64 \times 0.96) = 258.68$ c.c.

We then see that if we change from a +/- 4% residual percentage to a +/- 8%, the size of the dampener has been reduced to approximately by half.

Pressures will fluctuate, with a 4%
+6.24; -5.76
and with a 8% residual pulsation
+6.48; -5.52
the fluctuation is just +/- 0.24 bar (difference between 6.48 – 6.24 = 0.24).

In a few words with a higher residual pulsation percentage (8%) the pressure fluctuation in the circuit is of just:
+6.48 bar; -5.52 bar (for a theoretical pumping pressure of 6 bar)

<u>FINAL SUMMARY</u>

In the single-effect dosing pump application, what is important is avoiding the fluctuation of the pump discharge pressure from “zero” to a maximum as it will eventually generate breakdowns in the circuit.

Therefore and unless the final customer wants to control with great precision the pressure fluctuation, ***HIDRACAR*** recommends, for these working pressure values (below 10 bar) to calculate the dampener size with a percentage of +/- 8% in order to avoid an important extra cost of the pump + dampener combination.

FEBRUARY 2019

HIDRACAR S.A.

SIZING AND WORKING PRINCIPLES FOR A SUCTION PULSATION DAMPENER INSTALLED IN METERING PUMPS WHEN THE SUCTION PRESSURE IS BELOW 1 BAR ABSOLUTE

The pulsation dampener for these applications is necessary in order to:

- ✓ Maintain flow velocity in the suction piping constant, while avoiding the possible cavitation effect.
- ✓ Achieve a practically constant suction pressure. According to HIDRACAR experience this pressure variation shall be lower than ±0,1 BarA.

Example of sizing and dampening optimization in a real client case:

PROCESS CIRCUIT DETAILS AND EXISTING END USER ISSUE

Pump: Peristaltic pump with a flow of 4.000 lph and 25 strokes per minute.

Piping: 2” suction pipe diameter

The pump suctions grey water from an underground sewage pit. A special submerged filter has been installed in the sewage pit. The filter has been installed in order to re-use the water after filtering for a golf course irrigation system.

The end user installed an electronic sensor between the filter and the pump suction port in order to detect the loss of head across the filter. It was established that when the suction pressure falls below +0,7BarA, the filter ought to be cleaned. The pressure oscillated from +1,1BarA to +0,45BarA without the Suction Pulsation Dampener and with the filter in clean conditions. Therefore the electronic sensor wasn’t able to detect the increase of loss head across the filter (with the fixed pre-set value of +0,7BarA) due to the exiting pressure oscillations.

HIDRACAR was asked to resolve the suction pressure pulsations issue in order to obtain a stabilized suction pressure that allows the sensor to detect and increase of loss head across the filter.

Our client requested us to determine the dampener optimum size and design to reduce the pulsations till reaching oscillation amplitude of 0,15BarA. It means pressure oscillations from +0,95BarA to +0,8BarA with the filters in clean conditions.

PROBLEM RESOLUTION

HIDRACAR proposed the installation of a IN-LINE bladder suction pulsation dampener to solve the suction pressure fluctuations issue. The solution was based on our standard plastic units where we introduced a transversal threaded hole with the same diameter of the suction piping (2”) as evidenced in the next photo.

HIDRACAR S.A.

The efficiency of the Suction Pulsation Dampener is guaranteed thanks to its special in-line disposition described below:

- ✓ the two ports of the Dampener are aligned with the suction piping.
- ✓ the diameter of the Dampener's transversal threaded hole is the same as the suction piping.
- ✓ the bladder is in direct contact with the vein flow.
- ✓ The hole passage to the inlet of the dampener has section four times larger than standard dampeners

Another important point is to determine adequate size for the dampener and the required pre-set of the bladder before delivery. In the following sections, we will describe the methods we use for its determination and implementation.

SUCTION PULSATION DAMPENER SIZING

The dampener size is obtained in the same manner as for the pump discharge sizing. For more information, please read HIDRACAR Technical Article.

The sizing calculations data are described below:

Pump: Peristaltic with 2 impellers

Flow: 4.000 lph

SPM: 25

Admissible pressure oscillation (customer requirement): P1(max)-P2(min)= 0,15BarA

where:

P2(max)= +0,95BarA

P1(min)= +0,8BarA

For the determination of the dampener required Volume (Vo), we will use the following formula:

$$V_0 = \frac{P_2 \times \partial V}{P_2 - P_1}$$

δV= C /5 (Conservative assumption. We assume the volume fluctuation inside the dampener in a peristaltic pump is similar than in a 2 pistons single acting pump). See HIDRACAR Technical Article.

HIDRACAR S.A.

We haven't considered the thermal effect of quick expansion and contraction of gases for this example because of the low pressures in place.

C(cm3)= flow (lph) x 1000 / (spm x 60 x 2 impellers) = 1.333 cm3

δV= C /5= 267 cm3

and therefore **Vo= 1688cm3= 1,7 liters**

HIDRACAR selected the standard size immediately larger than the volume obtained from the sizing calculations.

U030 with Vo= 2,6 liters

DETERMINATION OF V3 (bladder gas volume in delivery conditions)

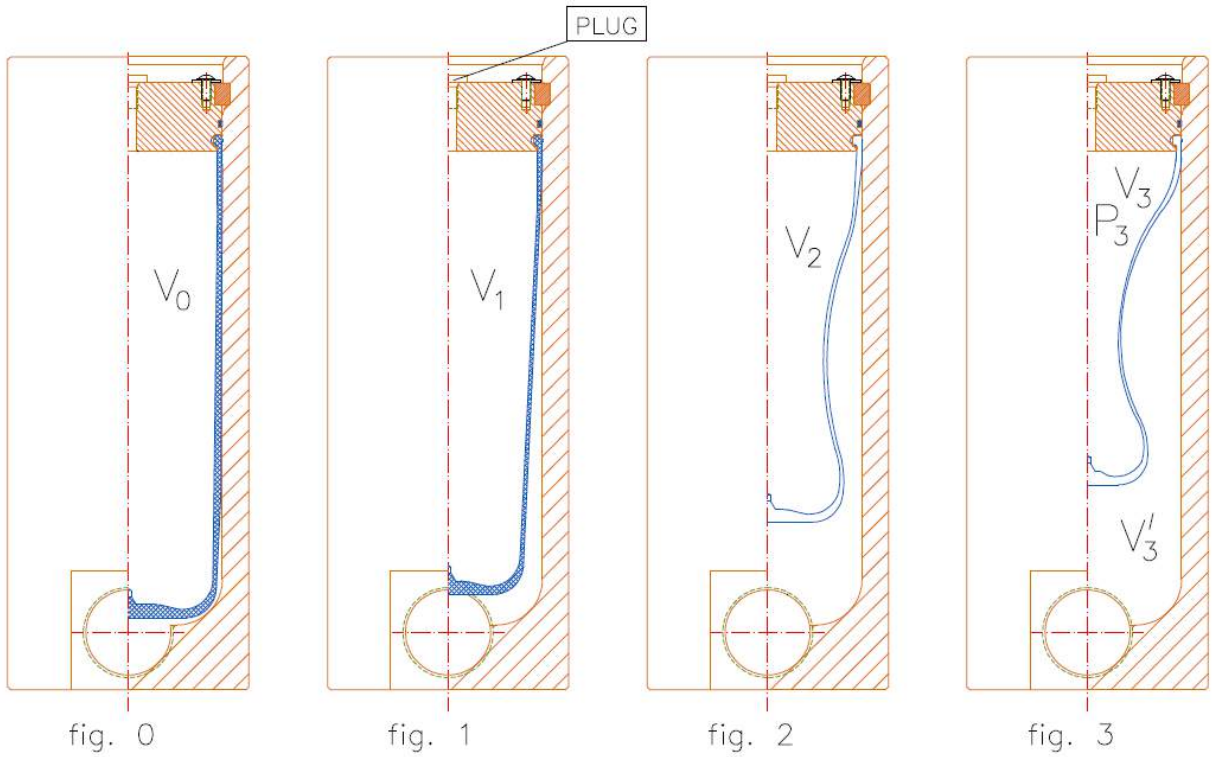

Figures 0 to 3 represent the 4 compression states of the bladder inside the suction pulsation dampener.

V1 = V2 + δV; P3= Atmospheric pressure

HIDRACAR deliver the suction pulsation dampeners with the bladder compressed at V3

In the Fig.0, the bladder is completely elongated occupying all the volume inside the pulsation dampener body. The total volume Vo= 2,6 liters.

In the Fig.1, the bladder is slightly elongated and the gas volume in its interior is V1. For this gas volume corresponds a pressure of P1= +0,8BarA.

HIDRACAR S.A.

In the Fig.2, the bladder is slightly compressed and the gas volume in its interior is V2. For this gas volume corresponds a pressure of P2= +0,95BarA.

In working conditions the bladder gas volume is fluctuating between Fig.1 and Fig.2, and the volume fluctuation is δV= V1-V2 = C /5 = 267 cm3.

In the Fig.3, the bladder is more compressed and the gas volume in its interior is V3. V3 is the volume that has to be pre-set in delivery conditions and we shall calculate it for dampening optimum performance. In delivery conditions the bladder is compressed with a gas volume V3 and atmospheric pressure 1Bara.

From the equality provided by Boyle Mariotte formula below:

$$Po \times Vo = P1 \times V1 = P2 \times V2 = P3 \times V3$$

We have:
Vo= 2,6
P1= 0,8BarA
P2= 0,95BarA
P3= 1BarA
δV= V1-V2 = 267 cm3

Therefore, we can deduce:
V1 = P2 x δV / (P2-P1) = 1.691 cm3= 1,7 liters
And then:

V3 = P1 x V1 / P3 = 1,36 liters

The suction pulsation dampener is delivered by HIDRACAR with compressed bladder at the value "V3" and the atmospheric pressure.

PRE-SETTING OF V3 (bladder gas volume in delivery conditions)

In the figures, you can see that instead of a gas charging valve, in the dampener top lid has been installed a ¼"BSP threaded plug. During the dampener pre-setting (compression of the bladder till reaching V3 at atmospheric pressure), the plug ought to be unscrewed permitting the air go out the dampener till reaching the required pre-set volume V3.

One of the process connection ports ought to be closed. Using a low pressure pump a certain volume of water "VL" has to be introduced inside the pulsation dampener. For that purpose we use a pump which suctions water from a calibration pot. Once "VL" has been introduced inside the dampener, the

VL= V0 – V3 = 2,6 – 1,36 = 1,24 liters

VL is the amount of liquid that has to be introduced in the pulsation dampener in the external part of the bladder and that will be determined registering the height in the calibration pot. Pay ATTENTION in order to not have occluded air.

Once VL of water has been introduced in the pulsation dampener, proceed to close the plug in the threaded connection of the top lid ¼" BSP. Then the water inside the dampener can be drained. The volume of gas V3 has already been pre-set.

PRE-SETTING IN THE SITE WITH OUR VACUUM KIT

HIDRACAR will deliver the suction pulsation dampener with its bladder in normal relaxed position.
In the top lid threaded connection ¼"BSP or Vg8, we have available a vacuum kit (*REF. BV-VAC)* with a venturi valve + air flow regulating valve and a vacuum pressure gauge.

Proceed to install the pulsation dampener in the circuit and start the pump. Slightly open the air flow regulating valve until there are no pressure oscillations on the vacuum gauge. Read the instructions of our Vacuum Kit (*REF. BV-VAC)* ATTENTION, stop purging air when there are no oscillations in the vacuum gauge.

In practice, we recommend to precharge at between -0,2 to -0,4 barG using our Vacuum Kit.

PRESSURE OSCILATIONS RESULTS AFTER THE SUCTION PULSATION DAMPENER INSTALLATION IN THE EXAMPLE

The **blue line** shows the variability of pressure with the filter clean without the HIDRACAR Suction Pulsation Dampener. In these conditions, the electronic sensor was not able to detect the head loss across the filter and therefore provide an electrical signal to clean the filter due to the oscillating pressures.

In the **red line**, once the Suction Pulsation Dampener was installed, the pressure variability was significantly reduced between +0,95BarA and +0.8BarA; and the sensor was successfully calibrated at +0,7BarA.

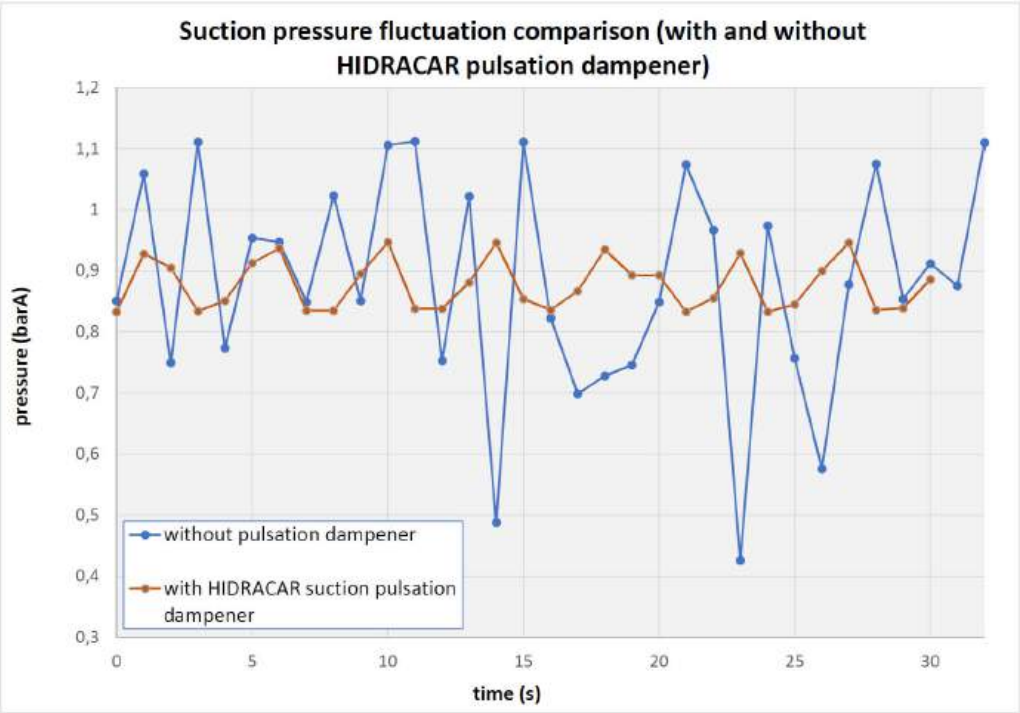

HIDRACAR S.A.

Rev. 07
16 / 7 / 2012

PULSATION DAMPER APPLICATION ON AN AIR VARIABLE PRESSURE DRIVING MEMBRANE PUMP

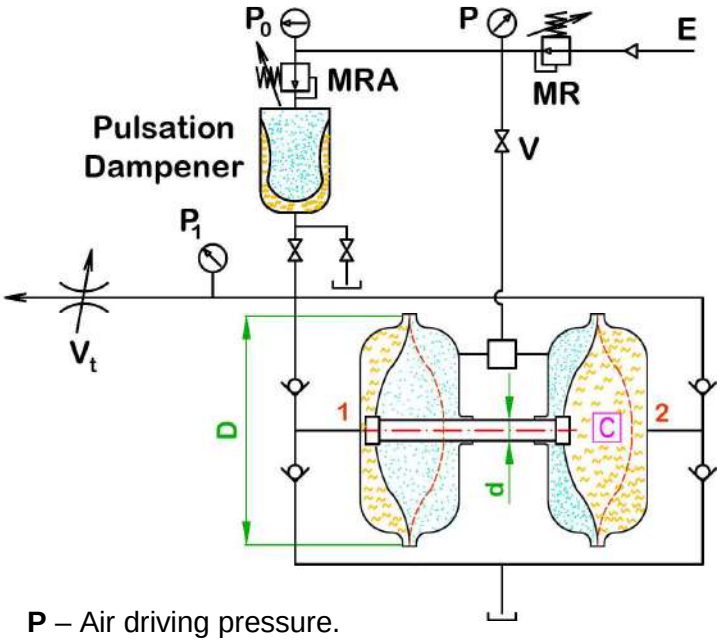

E – *Compressed air from the factory circuit.*
MR – *Air pressure reducer.*
MRA – *Dampener air precharging pressure reducer.*
V – *Isolating valve.*
V_t – *Throttle valve to increase the dampener efficiency.*

START RUNNING INSTRUCTIONS

I) Valve "V" closed. Fill the Dampener with air at an estimated pressure. Follow the formulas beside.

II) Open Valve "V" and adjust the working pressure needed in the liquid circuit.

III) With the air reducer valve "MRA" adjust the entrance of air into the Dampener until the pressure gage reads the accepted or calculated residual pulsation pressure.

P – Air driving pressure.
P_1 – Liquid pumped pressure.
P_0 – Dampener precharging air pressure.

$$P \times (D - d)^2 = P_1 \times D^2$$

NEVER start pumping liquid without air inside the dampener. The Bladder, Membrane or Bellows of the Dampener can be damaged.

$$P_1 = [P \times (D-d)^2] / D^2 \quad ; \quad (D-d)^2 / D^2 = PUMP\ CONSTANT = K$$

$$P_0 \approx 0.75 \times P_1 \longrightarrow \boxed{P_0 \approx 0.75 \times P \times K}$$

NOTE: P_0 ought to be measured with the dampener empty of liquid.

P_1 versus P_0 @ Constant Temperature	
P_1	P_0
8	6
7	5
6	4.5
5	3.5
4	3
3	2
2	1.5
1	0.7

∂V - *Liquid going into / out the dampener.*
C – *Liquid volume pumped per stroke.*
S – *Pump stroke.*

♦♦ Relation between **C** and **∂V**: $\boxed{\partial V \approx 0.2 \times C}$

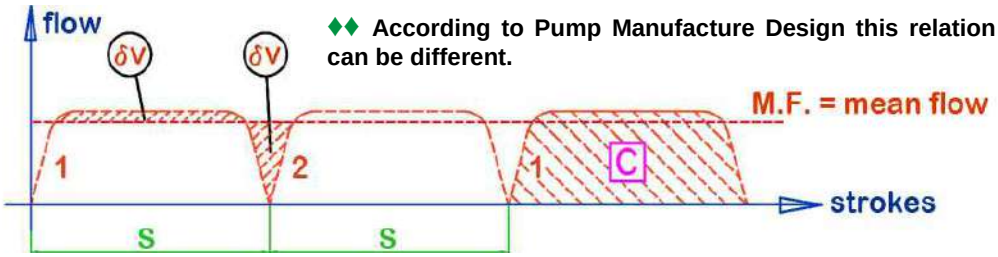

♦♦ According to Pump Manufacture Design this relation can be different.

FORMULA TO CALCULATE THE PULSATION DAMPER SIZE (V_0)♦ :

$$\boxed{V_0 \approx 15 \times \partial V}$$

♦ **FOR A RESIDUAL OSCILLATING PRESSURE OF APPROX. +/- 5% @ CONSTANT TEMPERATURE (To reduce this percentage, increase the Dampener size or, for more accuracy, see our Pulsation Damper Technical and Practical Article)**

HIDRACAR, S.A. • **Pol. Ind. Bufalvent - c/ Ramón Farguell, 73-77. 08243 Manresa, Barcelona (SPAIN)**
www.hidracar.com • E-mail: hidracar@hidracar.com • Tel.: +34 93 833 02 52 Fax: +34 93 833 19 50

HIDRACAR S.A.

Design, quality and experience since 1974

"We make liquids flow smoothly through pipes"

BLADDER, MEMBRANE & BELLOWS

PULSATION DAMPENERS

TO STABILIZE THE FLOW AND PRESSURE IN CIRCUITS WITH VOLUMETRIC PUMPS

- ✓ ALLOW PUMPS TO WORK WITHOUT SHOCKS, INCREASING ITS LIFE AND THE LIFE OF FILTERS, FLOWMETERS AND OTHER ACCESSORIES
- ✓ GIVE MORE ACCURACY TO PRESSURE GAUGES AND FLOWMETERS
- ✓ PREVENT LEAKAGE IN PIPE CONNECTIONS, CREATED BY PRESSURE PEAKS

SIZES RANGE FROM 0.07 TO 35 LITRES AND WORKING PRESSURES UP TO 1,000 bar

MATERIALS:

BODY: AISI 316L, POLYPROPILENE, PVC, PVDF & OTHERS

SEPARATOR: NITRILE, EPDM, FKM, SILICONE, PTFE, STAINLESS STEEL & OTHERS

STANDARD PLASTIC DAMPENER WITH BLADDER

VERY HIGH TEMPERATURE DAMPENER WITH STAINLESS STEEL BELLOWS

PTFE BELLOWS DAMPENER FOR CORROSIVE LIQUIDS

TWO PORT CONNECTION BLADDER DAMPENER

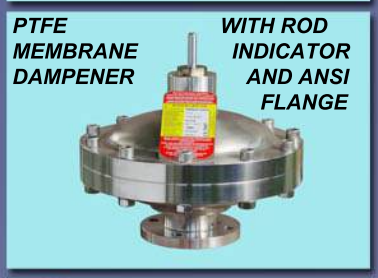

PTFE MEMBRANE DAMPENER WITH ROD INDICATOR AND ANSI FLANGE

IN-LINE DAMPENERS FOR FOOD & PHARMA APPLICATIONS

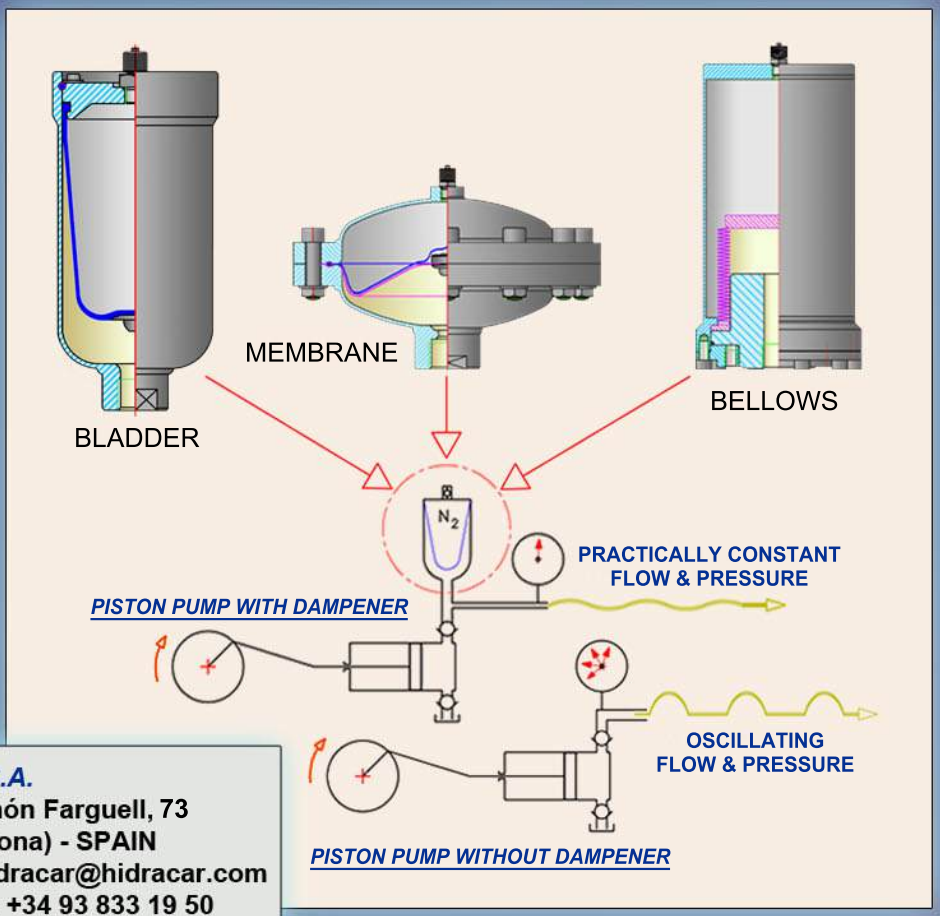

HIDRACAR S.A.

Pol. Ind. Bufalvent - c/ Ramón Farguell, 73

08243 Manresa (Barcelona) - SPAIN

www.hidracar.com • E-mail: hidracar@hidracar.com

Tel.: +34 93 833 02 52 Fax: +34 93 833 19 50

FLOW GRAPHICS OF DIFFERENT PISTON PUMP TYPES WITH A PULSATION DAMPER INSTALLED. THE LIQUID FLUCTUATION INSIDE THE DAMPENER IS REPRESENTED

T = time employed by the crankshaft when turning one revolution (ex. 0,4 sec.=150 r.p.m.)
C = capacity of the piston head (ex. 509 c.c. for the three pump types)
δ = theoretically the amount of liquid going in and out of the dampener in each cycle
M.I.F. = maximum instantaneous flow M.F. = mean flow

SINGLE PISTON PUMP

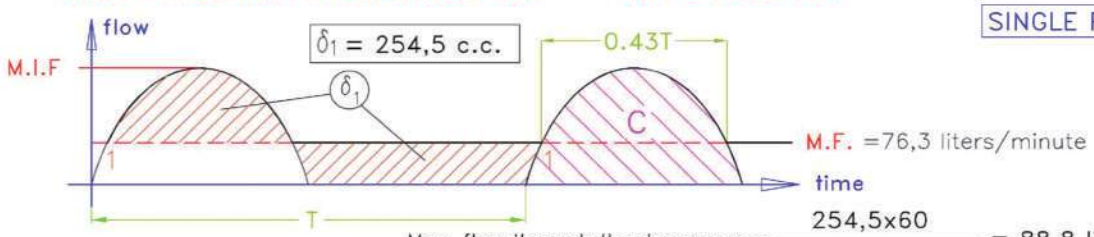

$$\frac{C}{2} = \delta_1$$

$$\text{Max. flow through the dampener} = \frac{254{,}5 \times 60}{0{,}43 \times 0{,}4 \times 1000} = 88{,}8 \text{ liters/minute}$$

TWO PISTONS PUMP (cranks at 180°)

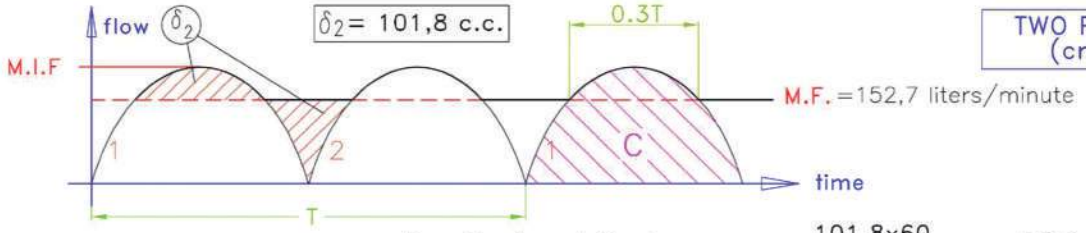

$$\frac{C}{5} = \delta_2$$

$$\text{Max. flow through the dampener} = \frac{101{,}8 \times 60}{0{,}3 \times 0{,}4 \times 1000} = 50{,}9 \text{ liters/minute}$$

THREE PISTONS PUMP (cranks at 120°)

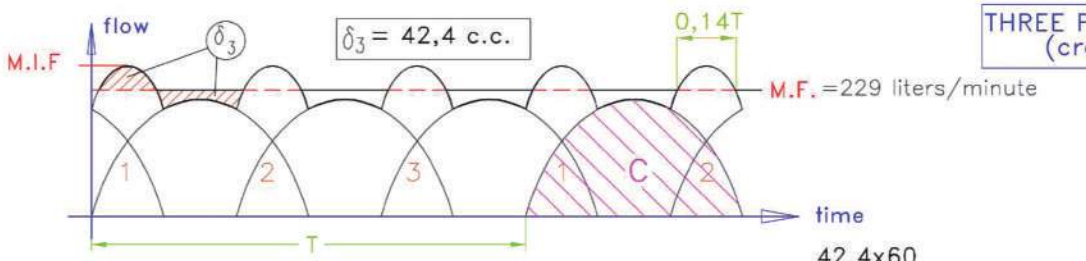

$$\frac{C}{12} = \delta_3$$

$$\text{Max. flow through the dampener} = \frac{42{,}4 \times 60}{0{,}14 \times 0{,}4 \times 1000} = 45{,}4 \text{ liters/minute}$$

EASY DAMPENER SIZE SELECTION CHART ACCORDING TO THE CAPACITY PER HEAD (*) AND THE ADMISIBLE RESIDUAL PULSATION (±%)

DAMPER TYPES REF.			DAMPERNER VOLUME (liters)			1 PISTON PUMP		2 PISTON PUMP		3 PISTON PUMP	
						ADMISIBLE RESIDUAL PULSATION (±%)					
						± 3%	± 6%	± 3%	± 6%	± 3%	± 6%
BLADDER	MEMBRANE	BELLOWS	BLADDER	MEMBRANE	BELLOWS	(*) CAPACITY PER HEAD (in cc)					
U000			0,04			3	6	7	14	18	36
U001			0,09			7	14	16	32	40	80
U002	M002	F002	0,18	0,20	0,15	14	28	35	70	80	160
U003	M004	F003	0,36	0,40	0,30	25	50	60	120	150	300
U007	M008	F007	0,65	0,80	0,70	45	90	110	220	270	540
U010			0,95			70	140	175	350	420	840
U015	M012	F015	1,50	1,20	1,50	110	220	275	550	660	1320
U030	M030	F030	2,60	2,80	2,60	190	380	475	950	1140	2280
U040	M040	F040	3,80	4,00	3,80	280	560	700	1400	1680	3360
U060	M060	F060	5,60	5,60	5,60	430	860	1075	2150	2580	5160
U100	M100	F100	10,40	10,00	10,00	775	1550	1925	3850	4650	9300
U150		F150	15,00		15,00	1120	2240	2800	5600	6720	13440
U250			25,00			1850	3700	4625	9250	11100	22200

NOTE: THE TABLE VALUES ARE APPROXIMATE AND CORREPOND TO A CONSTANT TEMPERATURE OF THE LIQUID AND EVIRONMENT

WE CAN CHANGE THE DATA WITHOUT PREVIOUS NOTICE

FORMULA TO OBTAIN THE (*) CAPACITY PER HEAD

$$C = \frac{FLOW(l/h)}{n \times 60 \times s.p.m.}$$

l/h = liters/hour
n = nº of heads
s.p.m. = strokes per minute, crankshaft revolution per minute

HIDRACAR S.A.

The European nº1 providing dampening solutions
Nº1 de Europa en soluciones de amortiguación

THE AUTHENTIC AND EFFECTIVE "IN-LINE" PULSATION DAMPERS
LOS AUTÉNTICOS Y EFECTIVOS AMORTIGUADORES DE PULSACIONES "EN LÍNEA"

FOR FOOD AND PAHRMACEUTICAL PROCESSES / PARA PROCESOS ALIMENTARIOS Y FARMACÉUTICOS

MAIN CHARACTERISTICS OF THE NEW IN-LINE DAMPER : / PRINCIPALES CARATERÍSTICAS DEL NUEVO AMORTIGUADOR "EN LÍNEA":

- NO LIMITATION IN THE NITROGEN GAS CHARGING PRESSURE
SIN LIMITACIÓN EN LA PRESIÓN DE CARGA DE GAS

- HIGHER DAMPENING CAPACITY (MORE VOLUME ABSORBED)
MAYOR AMORTIGUACIÓN (MÁS VOLUMEN ABSORBIDO)

- WITHOUT CORNERS FOR AN EFFECTIVE CLEANING
SIN RINCONES PARA UNA LIMPIEZA EFECTIVA

- NO WATER HAMMER EFFECT
SIN EFECTO GOLPE DE ARIETE

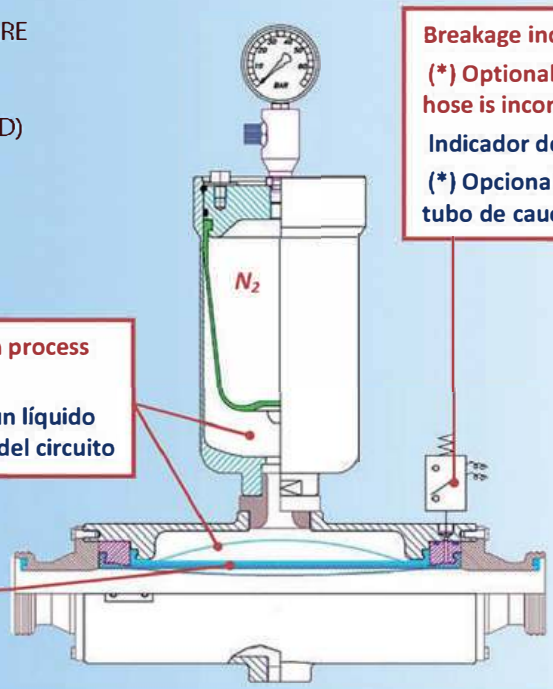

Breakage indicator
(*) Optional if double rubber hose is incorporated
Indicador de rotura
(*) Opcional si incorpora doble tubo de caucho.

Watertight chambers with process compatible liquid
Cámaras herméticas con un líquido compatible con el líquido del circuito

FDA rubber hose
(*) Optional. Double hose
Tubo de goma FDA
(*) Opcional. Doble tubo

FOR PROCESSES CONTAINING SOLID PARTICLES / PARA PROCESOS QUE CONTIENEN PÁRTICULAS SÓLIDAS AND ALSO FOR SUCTION LINES / Y TAMBIÉN PARA LÍNEAS DE SUCCIÓN

- THIS DESIGN HAS BEEN TESTED BY "GRUNDFOS". THE HIGH FREQUENCY (50 Hz) PEAKS OF PRESSURE HAS BEEN REDUCED 80%
EN ESTE DISEÑO ENSAYADO POR "GRUNDFOS". LOS PICOS DE PRESIÓN A ALTA FRECUÉNCIA (50 Hz) SE REDUJERON AL 80%

- HIGHER EFFICIENCY THANKS TO THE INTERNAL BIGGER PASSAGE SECTION
MAYOR EFICIÉNCIA GRÁCIAS A LA MAYOR SECCIÓN DE PASO INTERIOR

- (*) OPTIONAL. QUICK DISMANTLING SYSTEM WITHOUT DISASSEMBLING THE DAMPER FROM THE CIRCUIT
(*) OPCIONAL. SISTEMA DE EXTRACCIÓN RÁPIDA DE LA VEJIGA SIN DESMONTAR EL AMORTIGUADOR DEL CIRCUITO

(*) Optional. Quick dismantling system
(*) Opcional. Sistema de extracción rápido

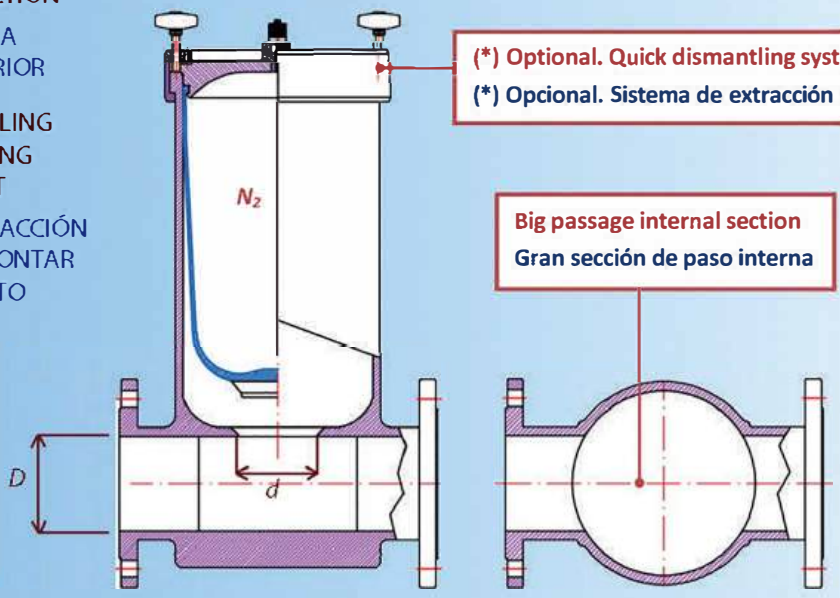

Big passage internal section
Gran sección de paso interna

D/d= 1,5 to 1

HIDRACAR S.A. • Pol. Ind. Bufalvent – c/ Ramón Farguell, 73–77 Manresa (Barcelona) - SPAIN www.hidracar.com • Tel.: +34 93 833 02 52 • E-mail: hidracar@hidracar.com

HIDRACAR

"We make liquids flow smoothly through pipes"

No. 1 providing dampening solutions

IN-LINE PULSATION DAMPENER

100% EFFECTIVE PRESSURE PULSE SUPPRESSION IN CIRCUITS:

- **for FOOD & BEVERAGE.**
- **for PHARMACEUTICAL industries.**
- **for circuits with VERY HIGH FREQUENCY pressure peaks.**

5 AVAILABLE SIZES	
Dampener model	Internal hose diameter ($\varnothing_i$):
L005	102 mm
L004	68 mm
L003	50 mm
L002	37 mm
L001	23 mm

Design pressure up to 150 barg

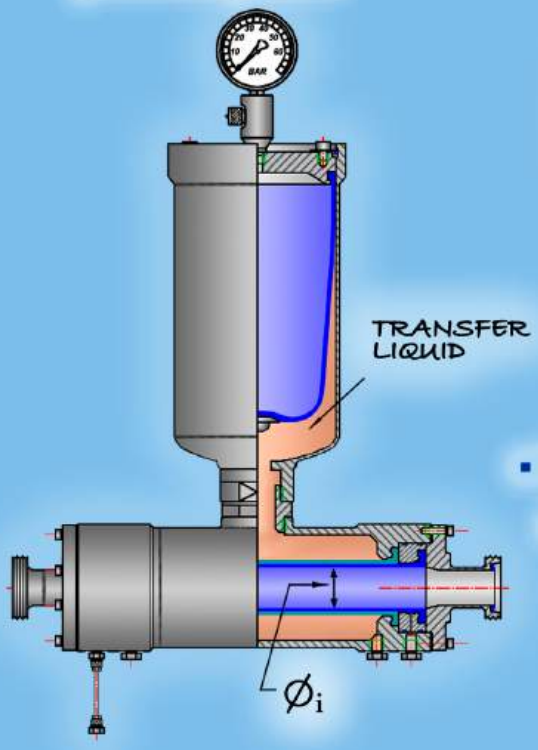

- **Made in stainless steel and other materials.**
- **Connection ports to suit customer's requirements.**
- **Fitted with a rubber hose rupture electronic or visual indicator.**
- **With either one or two rubber hoses in EPDM, silicone, etc,...**
- **Without internal corners for a thorough cleaning.**
- **Rubbers in compliance with FDA and CE (1935/2004) regulations.**

NEW IN-LINE LOW COST PLASTIC PULSATION DAMPENERS FOR USE MAINLY IN SUCTION LINES

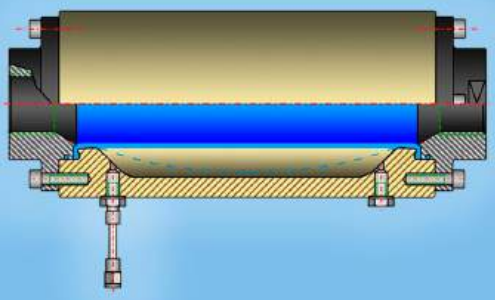

- **This dampener does not need gas charge; it works at the atmospheric pressure.**
- **Fitted with a rubber hose rupture visual indicator.**

1974 - 2024 50 ANNIVERSARY

SEE THE 3D IN-LINE VIDEO BELOW:

HIDRACAR S.A.
www.hidracar.com
hidracar@hidracar.com

HIDRACAR S.A.

STAINLESS STEEL BELLOWS PULSATION DAMPENER

TWO SPECIAL MODELS OF DAMPENER SUPPLIED TO SEVERAL IMPORTANT GERMAN PISTON PUMP MANUFACTURERS

LOW PRESSURE DESIGN DAMPENER WITH HEATING JACKET FOR HIGH VISCOSITY FLUIDS AT A HIGH TEMPERATURE

AMORTIGUADOR DE BAJA PRESIÓN DE DISEÑO CON CAMISA CALEFACTORA PARA FLUIDOS DE ALTA VISCOSIDAD Y TEMPERATURA

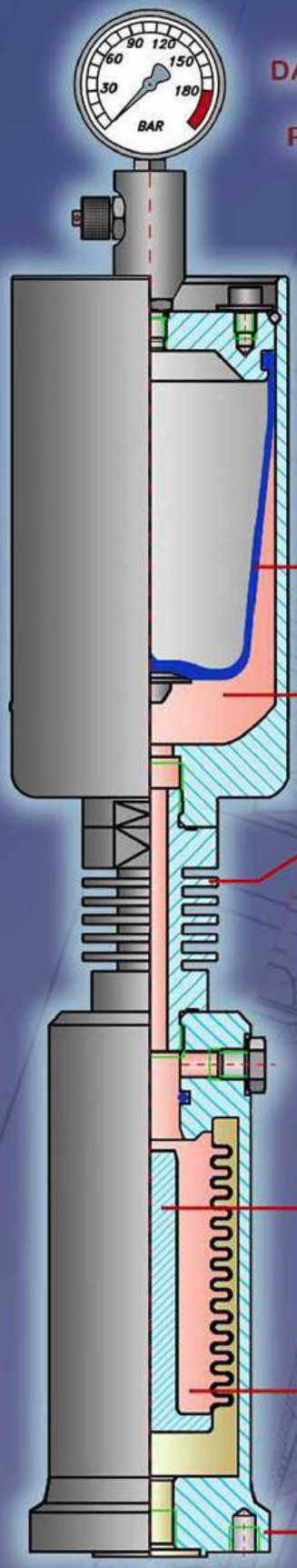

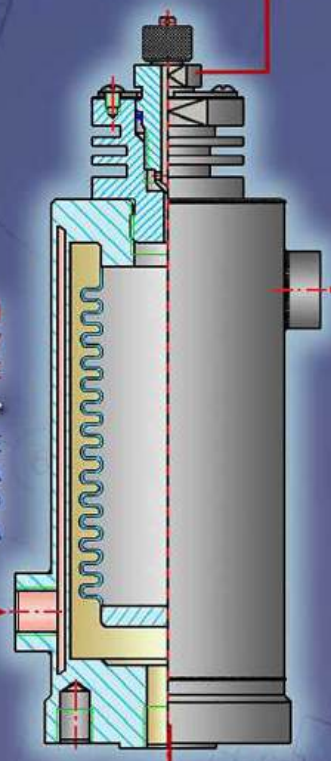

AMORTIGUADOR DE PULSACIONES CON FUELLE DE ACERO INOXIDABLE

DOS MODELOS ESPECIALES DE AMORTIGUADORES DE PULSACIONES SUMINISTRADOS A VARIOS IMPORTANTES FABRICANTES ALEMANES DE BOMBAS DE PISTONES

HIGH PRESSURE DAMPENER FOR WORKING AT A HIGH TEMPERATURE AND HIGH VARIABLE PRESSURE (SEVERAL CAN BE INSTALLED IN PARALLEL, WITH DIFFERENT GAS CHARGE VALUES TO PROVIDE DAMPENING FOR A RANGE OF VARIABLE CIRCUIT PRESSURES)

AMORTIGUADOR DE ALTA PRESIÓN PARA FUNCIONAMIENTO A ALTA TEMPERATURA Y ALTA PRESIÓN VARIABLE (VARIOS PUEDEN INSTALARSE EN PARALELO, CON DIFERENTE VALOR DE CARGA DE GAS PARA PROVEER AMORTIGUACIÓN EN UN RANGO DE PRESIONES DEL CIRCUITO VARIABLES)

HIDRACAR S.A. • Pol. Ind. Bufalvent – c/ Ramón Farguell, 73 Manresa (Barcelona) - SPAIN
www.hidracar.com • Tel.: +34 93 833 02 52 • E-mail: hidracar@hidracar.com

HIDRACAR S.A.

STAINLESS STEEL PULSATION DAMPENER WITH HEATING JACKET AND QUICK BLADDER EXTRACTION SYSTEM

AMORTIGUADOR DE PULSACIONES DE ACERO INOXIDABLE CON CAMISA CALEFACTORA Y SISTEMA DE EXTRACCIÓN RÁPIDA DE LA VEJIGA

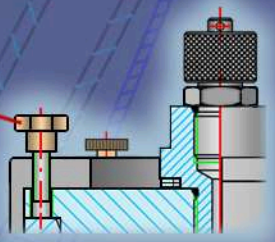

Gas cover extracting bolts

Pernos de extracción de la tapa gas

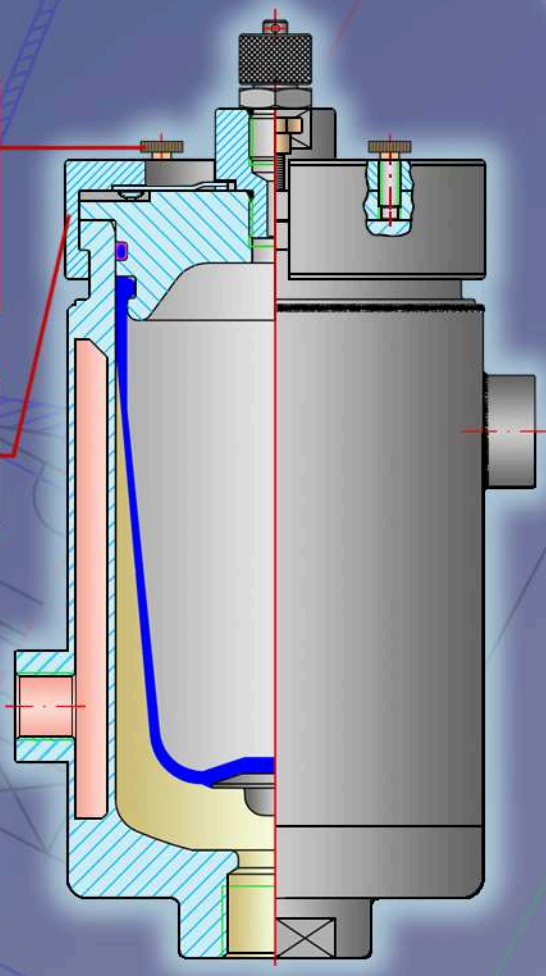

Gas cover retaining ring fastening bolts

Tornillos de sujeción de los anillos de retención de la tapa gas

Gas cover retaining rings

Anillos de retención de la tapa gas

Heating fluid inlet

Entrada del fluido calefactor

Heating fluid outlet

Salida del fluido calefactor

Integrates both the circuit liquid heating function and the ease of extraction of the bladder without requiring any tool.

Integra la capacidad de calentamiento del líquido del circuito y la facilidad de extracción de la vejiga sin requerir ningún tipo de herramienta.

They can be made in all our standard dampener volumes.

Pueden fabricarse para todos nuestros volúmenes estandar de amortiguadores.

HIDRACAR S.A. • Pol. Ind. Bufalvent – c/ Ramón Farguell, 73 08243 Manresa (Barcelona) - SPAIN
www.hidracar.com • Tel.: +34 93 833 02 52 • E-mail: hidracar@hidracar.com

HIDRACAR S.A.

HIDRACAR ACCUMULATOR REFERENCE CODE IDENTIFICATION

This is the standard ***HIDRACAR S.A.*** accumulator reference code layout (without colour; here only for code section identification purposes):

X # # # X # # X # - X X X X / X X

- The first letter (**X**) indicates the type of accumulator:

U for bladder **M** for membrane **F** for bellows **P** for piston

- The following three digits (**###**) identify the volume of the accumulator:

U000	0.04 litres	**P007**	0.70 litres	**U040**	3.80 litres	**U100**	10.4 litres	**P220**	22.0 litres
M001	0.08 litres	**M008**	0.80 litres	**M040**	4.00 litres	**M100**	10.0 litres	**U250**	25.0 litres
U001	0.09 litres	**U010**	0.95 litres	**F040**	3.80 litres	**F100**	10.0 litres	**P250**	25.0 litres
P001	0.14 litres	**P010**	1.00 litres	**F040i**	3.80 litres	**F100i**	10.0 litres	**P300**	30.0 litres
U002	0.18 litres	**M012**	1.20 litres	**P040**	4.00 litres	**P100**	10.0 litres	**U320**	32.0 litres
M002	0.20 litres	**U015**	1.50 litres	**P050**	5.00 litres	**P120**	12.0 litres	**U350**	35.0 litres
F002	0.15 litres	**F015**	1.50 litres	**U060**	5.60 litres	**U130**	13.0 litres	**P350**	35.0 litres
P002	0.20 litres	**F015i**	1.50 litres	**M060**	5.60 litres	**P140**	14.0 litres	**P400**	40.0 litres
U003	0.36 litres	**P015**	1.50 litres	**F060**	5.60 litres	**U150**	15.0 litres	**P500**	50.0 litres
F003	0.30 litres	**P020**	2.00 litres	**F060i**	5.60 litres	**M150**	15.0 litres	**P600**	60.0 litres
P003	0.35 litres	**P025**	2.50 litres	**P060**	6.00 litres	**F150**	15.0 litres	**P700**	70.0 litres
M004	0.40 litres	**U030**	2.60 litres	**U061**	6.00 litres	**F150i**	15.0 litres	**P800**	80.0 litres
P005	0.50 litres	**M030**	2.80 litres	**P070**	7.00 litres	**P150**	15.0 litres	**P900**	90.0 litres
U007	0.65 litres	**F030**	2.60 litres	**P080**	8.00 litres	**P160**	16.0 litres	**P990**	99.0 litres
F007	0.70 litres	**F030i**	2.60 litres	**P090**	9.00 litres	**U200**	20.0 litres		
F007i	0.70 litres	**P030**	3.00 litres	**U095**	9.50 litres	**P200**	20.0 litres		

- The second letter (**X**) refers to the type of gas charging valve:

A for a ¼" BSP valve (for N2) **B** for Vg8 valve (for air)

- The second set of two digits (**##**) refers to the design pressure of the accumulator (number to be multiplied by 10 to give the actual pressure in bar units):

Examples:

02 (0)2 x 10 = 20 bar **18** 18 x 10 = 180 bar **41** 41 x 10 = 410 bar

- The third letter (**X**) identifies the material of the separator element between the charging gas (N_2 or air) and the liquid in the circuit (except for the piston accumulators, for which it identifies the material of "o"-rings):

N Nitrile rubber (NBR) **E** EPDM rubber **V** FKM rubber **B** Butyl rubber
S Silicone rubber **G** Hydrogenated NBR **R** Low temperature nitrile rubber
T TFM y PTFE **F** FKM (70% fluorine) **C** Neoprene rubber **A** Aflas **H** Hypalon
I Stainless steel **D** TFM & FKM double membrane **L** FKM for low temperature

- Followed by a last digit (**#**) which refers to the number of connecting ports (see the standard thread size available on each technical note; these are referenced at the very end of the code as such if different from our standard thread size):

1 One connection port **2** Two connection ports

- Finally, the last set of two to four letters (**XXXX**) (or its absence) identifies the raw material of the accumulator body and the bladder or membrane inserts:

AI AISI 316L Stainless steel **DU** Duplex **SDU** Super Duplex **TI** Titanium
HAST Hastelloy **AC** Carbon steel **ALLY** Special alloy
SA Carbon steel – internal nickel coating accumulator for water service
PP Polypropylene **PC** PVC **PCC** Chlorinated PVC **PD** PVDF

- In some instances an extra codification for one or more special characteristics is added, separated by slashes after the basic part of the reference code:

E Special manufacture **DR** Quick dismantling design **CR** Reinforcing jacket
IN Indicator rod attachment **BA** With a connection for an additional cylinder
NS Apparatus without welded seams **IC** Internal HALAR ® coating **SB** No insert bladder
TF PTFE connection port **TFG** Graphite-PTFE connection port
PE Polyethylene connection port **PD** PVDF connection port **PC** PVC connection port
HC Hastelloy connection port **CC** With a heating jacket
(90º) Connection port at 90º **(LINIA)** In-line accumulator

Let's see an overall example:

F007A11I1-AI/CC

F007A11I1-AI/CC

F	Bellows type	**007**	0.65 litres volume
A	Fitted with a ¼" BSP valve	**11**	110 bar design pressure
I	Stainless steel bellows	**1**	One connection port
AI	Stainless steel body	**CC**	With a heating jacket

So this reference corresponds to a stainless steel, bellows type, accumulator with an internal volume of 0.65 litres, designed for working at a pressure of 110 bar, fitted with a stainless steel bellows, one standard connection port, a ¼" BSP gas charging valve and a heating jacket.

13th Rev., October 2024

HIDRACAR S.A.
Pol.Ind.Bufalvent C/Ramon Farguell 73-77
08243 Manresa (Barcelona)- Spain
T. +34 938 330 252
hidracar@hidracar.com
www.hidracar.com

DATA SHEET	REFERENCE:	REV:	DATE:	DRAWN	APPROVED
PLASTIC PULSATION DAMPENERS	AV.PL.BP.IN.DOC	25	DEC-25	P.BASCOMPTA	E.CORTINA

NOTE: Those pulsation dampener ought to be filed with gas at 80% of the working pressure. It shall be done at the working temperature. Can be done with compressed air if it is compatible with the liquid pumped. Use a tire inflating air tool. If need to be charged with N2, use our valve Ref. 004-AI (1/4"BSP) and our charging kit Ref. BVXXXA1TM.

ATTENTION! THE SIZES WITH (*) ALWAYS MUST BE MOUNTED VERTICALLY (VALVE 3 ON TOP)

Value of "K" : $\frac{\text{Maxi. Pressure}}{\text{Filling gas Pressure}} \leq$ K (@Constant Temp.)

TOLERANCES: External dimentions: ±3% Volume: ±2.5% Weight: ±5%

* * For PVDF use our PTFE + PVDF Bellows dampeners

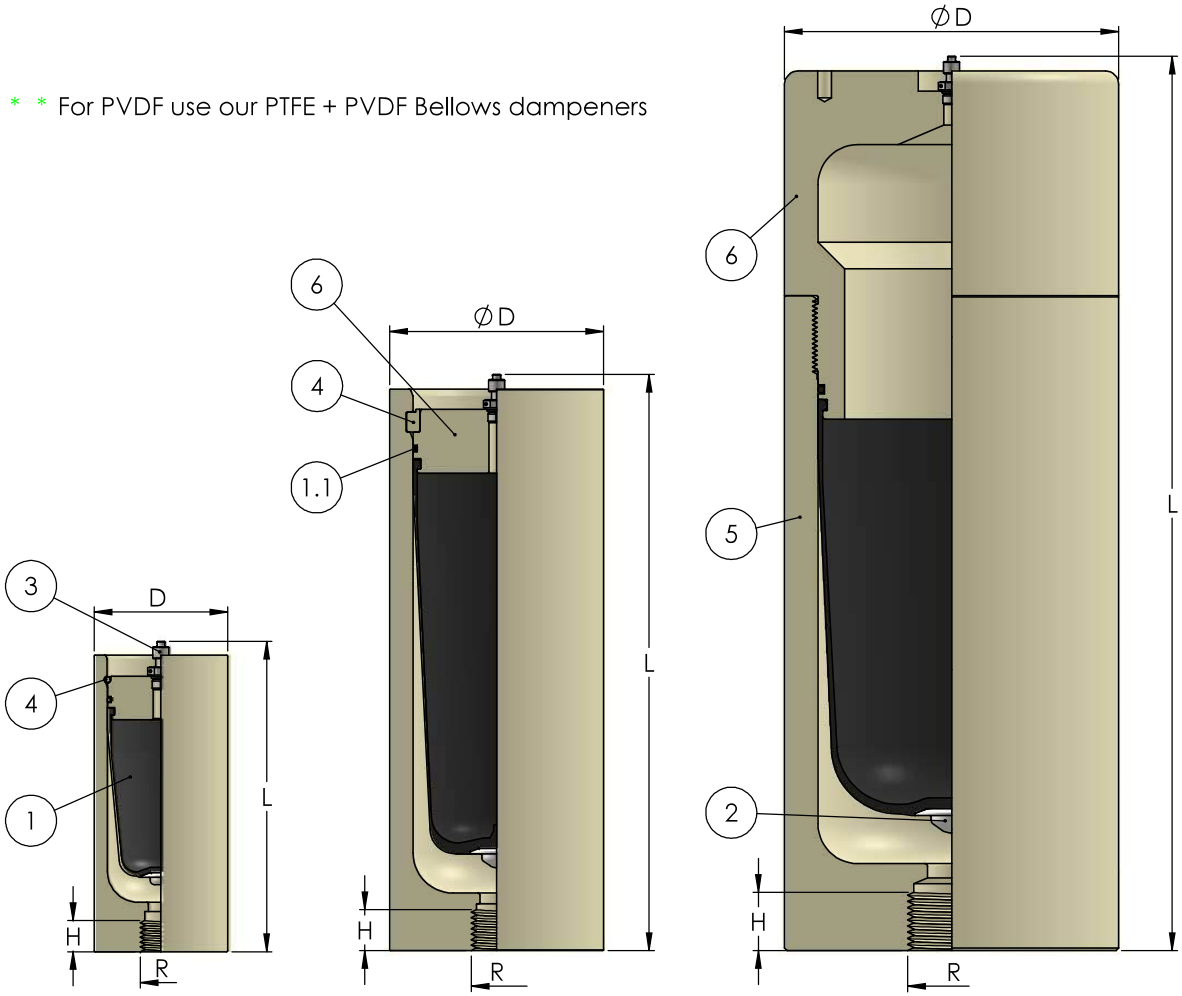

U000 to U006 U010 to U100 U150 & U200

Wall thickness acc. to EN14359 code
Hydrostatic test pressure @ 1.43 x Design pressure @ 20ºC

FOR HIGHER PRESSURES, SIZES, MATERIALS AND THREADED CONNECTIONS, PLEASE CONSULT

PULSATION DAMPENER MODEL	VOLUME (liters)	D (mm)	L (mm)	R (BSP)	H (mm)	WEIGHT (kg)			K VALUE
						PP	PC	PD	
U000X01X1-X	0.04	60	97	3/8"	16	0.23	0.30	0.37	2.5
U001X01X1-X	0.09	60	122			0.25	0.34	0.42	
U002X01X1-X	0.18	80	156	1/2"	20	0.50	0.72	0.90	
U003X01X1-X	0.36	90	186	3/4"		0.68	1.03	1.26	3.0
U006X01X1-X	0.65		258			0.95	1.40	1.74	3.5
U010X01X1-X	0.95	130	253	1"	26	1.86	2.80	3.76	3.0
*U015X01X1-X	1.50		297			2.20	3.10	4.15	3.5
U030X01X1-X	2.60	160	334		32	3.70	5.60	7.50	
*U040X01X1-X	3.80		431			4.60	6.60	8.30	4.0
*U060X01X1-X	5.60	200	474	1-1/2"		8.00	11.5	* *	
*U100X01X1-X	10.40	250	491	2"	50	12.4	18.4	* *	
*U150X01X1-X	15.00		669			16.4	24.6	* *	3.0
*U200X01X1-X	20.00		892			21.0	27.7	* *	2.0

REFERENCE CODE IDENTIFICATION

Charging valve X = A (for a 1/4" BSP valve) or B (for a Vg8 valve)
Rubber bladder X = N (NBR) , B (BUTYL), E (EPDM) or V (FKM)
Body wet parts X = PP (Polypropylene), PC (PVC) or PD (PVDF)

MAX. WORKING PRESSURE FOR ALL SIZES: 10 bar-g

MINIMUM SAFETY FACTOR: 5:1 (minimum rupture pressure: 50 bar-g)

WORKING LIMITS TEMPERATURES(ºC): (0ºC to +60ºC for PVC & PP)
(-15ºC to +70ºC for PVDF)

THE MAX. WORKING TEMPERATURE CAN BE REDUCED DEPENDING ON THE LIQUID IN CONTACT

Nº	ITEM	QT.	MATERIAL
1	BLADDER	1	NBR, EPDM, FKM & BUTYL
1.1	O-RING	1	NBR, EPDM, FKM & BUTYL
2	INSERT	1	PTFE (Not included in U000)
3	FILLING AIR VALVE	1	AISI 316L (1/4" BSP or Vg8)
4	RETAINING RING	1	PP or Stainless Steel
5	BODY	1	PP, PD or PC
6	COVER	1	PP, PD or PC

HIDRACAR S.A.
Pol.Ind.Bufalvent C/Ramon Farguell 73-77
08243 Manresa (Barcelona)- Spain
T. +34 938 330 252
hidracar@hidracar.com
www.hidracar.com

DATA SHEET "IN LINE" BLADDER & BIG BORE PULSATION DAMPENERS	REFERENCE:	REV:	DATE:	DRAWN	APPROVED
	AV.PP.BP.DP.BB.IN.DOC	05	DEC-25	P.BASCOMPTA	E.CORTINA

NOTE: Those pulsation dampener ought to be filed with gas at 80% of the working pressure. It shall be done at the working temperature. Can be done with compressed air if it is compatible with the liquid pumped. Use a tire inflating air tool. If need to be charged with N2, use our valve Ref. 004-AI (1/4"BSP) and our charging kit Ref. BVXXXA1TM.

ATTENTION! THE SIZES WITH (*) ALWAYS MUST BE MOUNTED VERTICALLY (VALVE 3 ON TOP)

Value of "K" : $\frac{\text{Maxi. Pressure}}{\text{Filling gas Pressure}} \leq$ K (@Constant Temp.)

TOLERANCES: External dimentions: ±3% Volume: ±2.5% Weight: ±5%

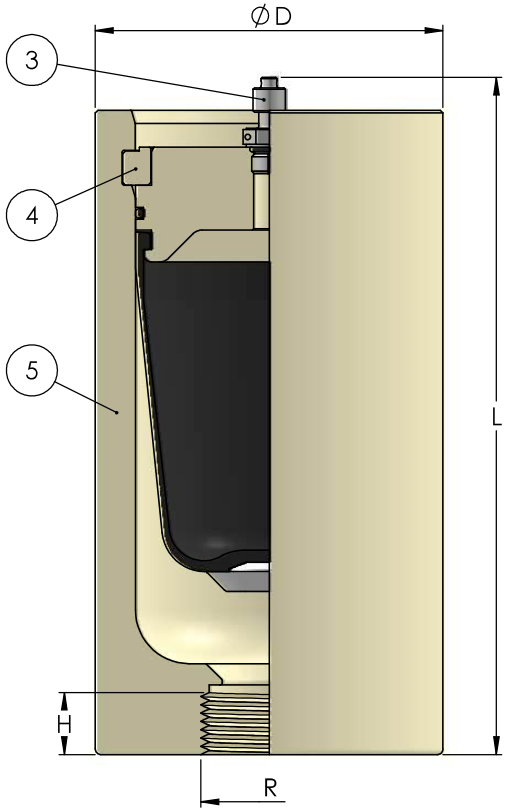

BIG BORE

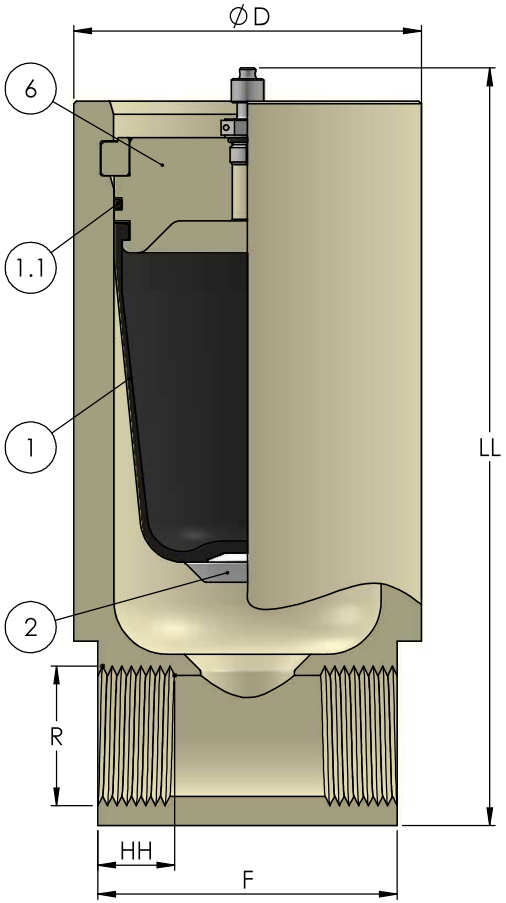

IN LINE TWO CONNECTION PORTS

Wall thickness acc. to EN14359 code
Hydrostatic test pressure @ 1.43 x Design pressure @ 20ºC

FOR HIGHER PRESSURES, SIZES, MATERIALS AND THREADED CONNECTIONS, PLEASE CONSULT

PULSATION DAMPENER MODEL	VOLUME (liters)	D (mm)	F (mm)	H (mm)	HH (mm)	L (mm)	LL (mm)	R (BSP)	WEIGHT (kg) TWO PORTS	WEIGHT (kg) BIG BORE	K VALUE
U002X01X#-PP/X	0.18	80	73.4	-	18	-	150	1/2"	0.60	-	2.5
U003X01X#-PP/X	0.36	90	80.6	-	20	-	180	3/4"	0.78	-	3.0
U010X01X#-PP/X	0.95	130	112	25	28	241	271	1-1/2"	2.0	-	
*U015X01X#-PP/X	1.50			23		285	315		2.3	2.2	3.5
U030X01X#-PP/X	2.60	160	132	30	27	323	362	2"	4.2	3.8	
*U040X01X#-PP/X	3.80					420	459		5.1	4.7	4.0
*U060X01X#-PP/X	5.60	198	174.5	36	33	468	523	2-1/2"	8.5	7.7	
*U100X01X#-PP/X	10.4	250	221	48	40	490	578	4"	16.4	12	

REFERENCE CODE IDENTIFICATION

Charging valve X = A (for a 1/4" BSP valve) or B (for a Vg8 valve)
Rubber bladder X = N (NBR), B (BUTYL), E (EPDM) or V (FKM)
Connection ports # = 1 (One connection port) or 2 (Two connection ports)
Special connection X = BB (Big Bore connenction)

MAX. WORKING PRESSURE FOR ALL SIZES: 10 bar-g

MINIMUM SAFETY FACTOR: 5:1 (minimum rupture pressure: 50 bar-g)

WORKING LIMITS TEMPERATURES(ºC): 0ºC to +60ºC

THE MAX. WORKING TEMPERATURE CAN BE REDUCED DEPENDING ON THE LIQUID IN CONTACT

Nº	ITEM	QT.	MATERIAL
1	BLADDER	1	NBR, EPDM, FKM & BUTYL
1.1	O-RING	1	NBR, EPDM, FKM & BUTYL
2	INSERT	1	PTFE
3	FILLING AIR VALVE	1	AISI 316L (1/4" BSP or Vg8)
4	RETAINING RING	1	Polypropylene or AISI 316
5	BODY	1	Polypropylene
6	COVER	1	Polypropylene

HIDRACAR S.A.	DATA SHEET	REFERENCE:	REV:	DATE:	DRAWN	APPROVED
Pol.Ind.Bufalvent C/Ramon Farguell 73-77 08243 Manresa (Barcelona)- Spain T. +34 938 330 252 hidracar@hidracar.com www.hidracar.com	S.S.MEDIUM & LOW PRESSURE BLADDER PULSATION DAMPENERS	AV.AI.MP-BP.IN.DOC	28	SEP-25	P.BASCOMPTA	E.CORTINA

NOTE: Those pulsation dampener ought to be filed with gas at 80% of the working pressure. It shall be done at the working temperature. Can be done with compressed air if it is compatible with the liquid pumped. Use a tire inflating air tool. If need to be charged with N2, use our valve Ref. 004-AI (1/4"BSP) and our charging kit Ref. BVXXXA1TM.

ATTENTION! THE SIZES WITH (*) ALWAYS MUST BE MOUNTED VERTICALLY (VALVE 3 ON TOP)

Value of "K" : $\frac{\text{Maxi. Pressure}}{\text{Filling gas Pressure}} \leq$ K (@Constant Temp.)

TOLERANCES: External dimentions: ±3% Volume: ±2.5% Wieght: ±5%

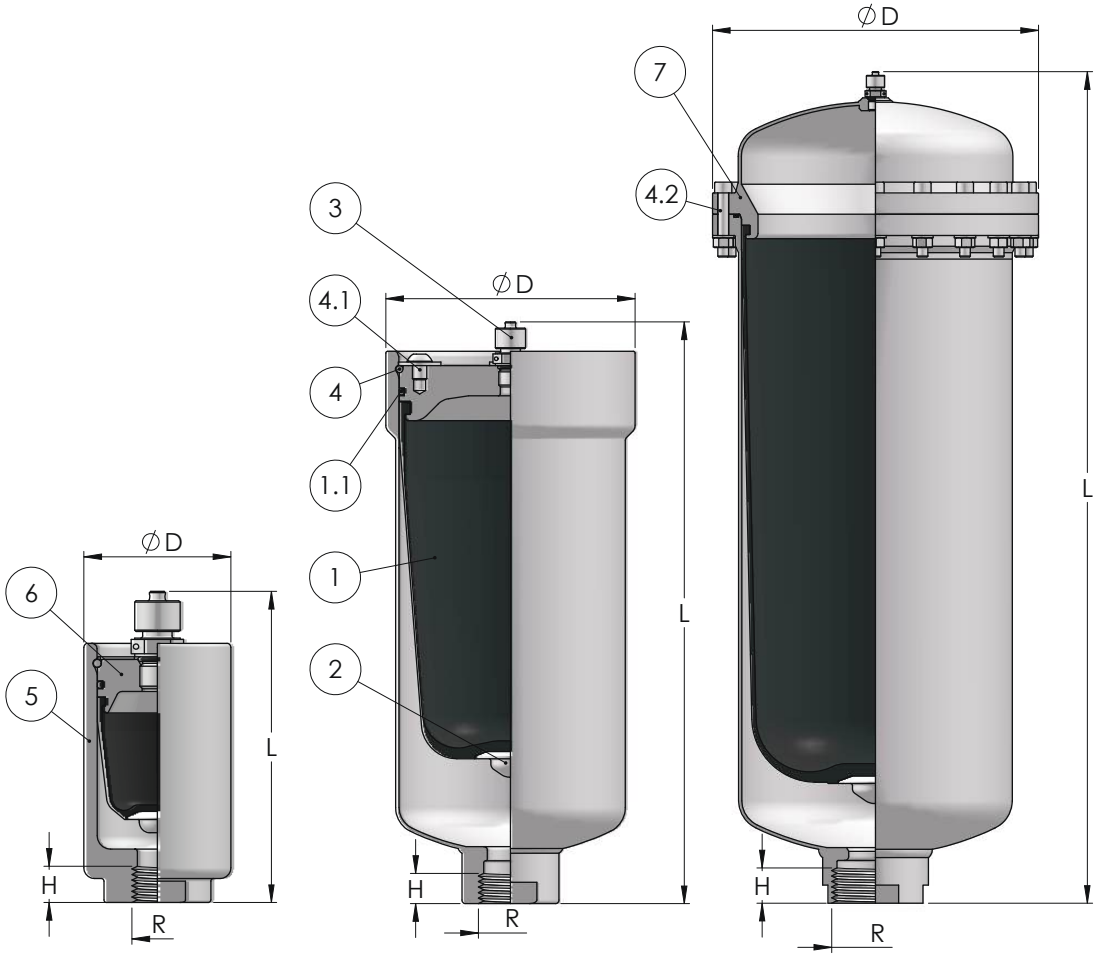

U000 to U002 U003 to U250 U350 & U095

Wall thickness acc. to EN14359 code
Hydrostatic test pressure @ 1.43 x Design pressure @ 20ºC

FOR HIGHER PRESSURES, SIZES, MATERIALS AND THREADED CONNECTIONS, PLEASE CONSULT

PULSATION DAMPENER MODEL	VOLUME (liters)	DESIGN PRESSURE (bar-g @50ºC)	D (mm)	L (mm)	R (BSP)	H (mm)	WEIGHT (kg)	K VALUE
U000A26X1-AI	0.04	260	55	90	3/8"	14	0.8	2.5
U001A26X1-AI	0.09			117			1.0	
U002A18X1-AI	0.18	180	70	141	1/2"		1.8	
U003A09X1-AI	0.36	90	84.5	176		15	2.1	3.0
U006A09X1-AI	0.65			256			2.6	3.5
U010A07X1-AI	0.95	70	113	229	3/4"	18	4.9	3.0
*U015A07X1-AI	1.50			276			5.2	3.5
U030A05X1-AI	2.60	50	140	322	1"	27	6.0	
*U040A05X1-AI	3.80			429			6.5	5.0
*U060A04X1-AI	5.60	40	168	437	1-1/2"	30	10.0	
*U095A04X1-AI	9.50		198	665			12.5	2.0
*U100A03X1-AI	10.40	30	220	454	2"		15.0	4.0
*U150A03X1-AI	15.00			664			19.2	5.0
*U250A02X1-AI	27.00	20	271	708	2-1/2"		26.0	4.0
*U350A02X1-AI	34.50		305	778			28.5	2.2

REFERENCE CODE IDENTIFICATION

Rubber bladder X = N (NBR), B (BUTYL), E (EPDM) or V (FKM)

Rubbers Max. Working Temperatures (ºC)	N	B	E	V
	+80 -15	+100 -30	+130 -30	+150 -20

Working Temperatures Versus Working Pressures

For a temperature of 80ºC correspond design pressure x 0.87
" " " " 100ºC " " " x 0.82
" " " " 130ºC " " " x 0.78
" " " " 150ºC " " " x 0.75

THE MAX. WORKING TEMPERATURE CAN BE REDUCED DEPENDING ON THE LIQUID IN CONTACT

Nº	ITEM	QT.	MATERIAL
1	BLADDER	1	NBR, BUTYL, EPDM & FKM
1.1	O-RING	1	NBR, BUTYL, EPDM & FKM
2	INSERT	1	AISI 316L
3	INFLATING N2 VALVE	1	AISI 316L (1/4" BSP)
4	RETAINING RING	1	AISI 316
4.1	BOLTS	1 to 3	ISO7380 A4-70
4.2	BOLTS + NUTS +GASKET	12 to 20	DIN 912 & 934 A4-70
5	BODY	1	AISI 316L
6	GAS COVER	1	AISI 316L
7	UPPER BODY	1	AISI 316L

HIDRACAR S.A.
Pol.Ind.Bufalvent C/Ramon Farguell 73-77
08243 Manresa (Barcelona)- Spain
T. +34 938 330 252
hidracar@hidracar.com
www.hidracar.com

DATA SHEET	REFERENCE:	REV:	DATE:	DRAWN	APPROVED
S.S.MEDIUM BLADDER PULSATION DAMPENERS	AV.AI.MP.IN.DOC	24	SEP-25	P.BASCOMPTA	E.CORTINA

NOTE: Those pulsation dampener ought to be filed with gas at 80% of the working pressure. It shall be done at the working temperature. Can be done with compressed air if it is compatible with the liquid pumped. Use a tire inflating air tool. If need to be charged with N2, use our valve Ref. 004-AI (1/4"BSP) and our charging kit Ref. BVXXXA1TM.

ATTENTION! THE SIZES WITH (*) ALWAYS MUST BE MOUNTED VERTICALLY (VALVE 3 ON TOP)

Value of "K" : $\frac{\text{Maxi. Pressure}}{\text{Filling gas Pressure}} \leq$ K (@Constant Temp.)

TOLERANCES: External dimentions: ±3% Volume: ±2.5% Weight: ±5%

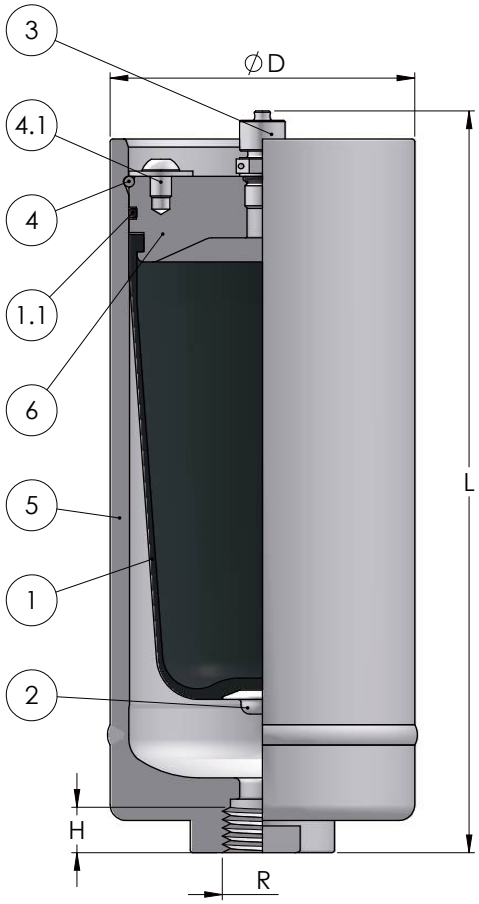

Wall thickness acc. to EN14359 code
Hydrostatic test pressure @ 1.43 x Design pressure @ 20ºC

FOR HIGHER PRESSURES, SIZES, MATERIALS AND THREADED CONNECTIONS, PLEASE CONSULT

PULSATION DAMPENER MODEL	VOLUME (liters)	DESIGN PRESSURE (bar-g @50ºC)	D (mm)	L (mm)	R (BSP)	H (mm)	WEIGHT (kg)	K VALUE
U000A26X1-AI	0.04	260	55	90	3/8"	14	0.8	2.5
U001A26X1-AI	0.09			117			1.0	
U002A18X1-AI	0.18	180	70	141	1/2"		1.8	
U003A18X1-AI	0.36		85	184		16	3.6	3.0
U006A18X1-AI	0.65			264			5.2	3.5
U010A11X1-AI	0.95	110	114	234	3/4"	25	6.0	3.0
*U015A11X1-AI	1.50			278			6.8	3.5
U030A11X1-AI	2.60		140	323	1"	27	10.5	
*U040A11X1-AI	3.80			426			12.2	5.0
*U060A12X1-AI	5.60	120	167	451	1-1/2"	35	24.0	
*U100A10X1-AI	10.40	100	217	474	2"		46.0	4.0
*U150A10X1-AI	15.00			684			52.5	5.0
*U250A10X1-AI	27.00		271	731	2-1/2"		70.0	4.0

REFERENCE CODE IDENTIFICATION

Rubber bladder X = N (NBR), B (BUTYL), E (EPDM) or V (FKM)

Working Temperatures Versus Working Pressures

For a temperature of 80ºC correspond design pressure x 0.87
" " " " 100ºC " " " x 0.82
" " " " 130ºC " " " x 0.78
" " " " 150ºC " " " x 0.75

Rubbers Max. Working Temperatures (ºC)			
N	B	E	V
+80 -15	+100 -30	+130 -30	+150 -20

THE MAX. WORKING TEMPERATURE CAN BE REDUCED DEPENDING ON THE LIQUID IN CONTACT

Nº	ITEM	QT.	MATERIAL
1	BLADDER	1	NBR, EPDM, FKM & BUTYL
1.1	O-RING	1	NBR, EPDM, FKM & BUTYL
2	INSERT	1	AISI 316L
3	INFLATING N2 VALVE	1	AISI 316L (1/4" BSP)
4	RETAINING RING	1	AISI 316L
4.1	BOLT	1 to 4	ISO7380 A4-70
5	BODY	1	AISI 316L
6	COVER	1	AISI 316L

HIDRACAR S.A.
Pol.Ind.Bufalvent C/Ramon Farguell 73-77
08243 Manresa (Barcelona)- Spain
T. +34 938 330 252
hidracar@hidracar.com
www.hidracar.com

DATA SHEET	REFERENCE:	REV:	DATE:	DRAWN	APPROVED
SS. MEDIUM AND LOW PRESSURE "IN LINE" & BIG BORE, BLADDER PULSATION DAMPENERS	AV.AI.MP-BP.DP.BB.IN.DOC	06	SEP-24	P.BASCOMPTA	E.CORTINA

NOTE: Those pulsation dampener ought to be filed with gas at 80% of the working pressure. It shall be done at the working temperature. Can be done with compressed air if it is compatible with the liquid pumped. Use a tire inflating air tool. If need to be charged with N2, use our valve Ref. 004-AI (1/4"BSP) and our charging kit Ref. BVXXXA1TM.

ATTENTION! THE SIZES WITH (*) ALWAYS MUST BE MOUNTED VERTICALLY (VALVE 3 ON TOP)

Value of "K" : $\frac{\text{Maxi. Pressure}}{\text{Filling gas Pressure}} \leq$ K (@Constant Temp.)

TOLERANCES: External dimentions: ±3% Volume: ±2.5% Weight: ±5%

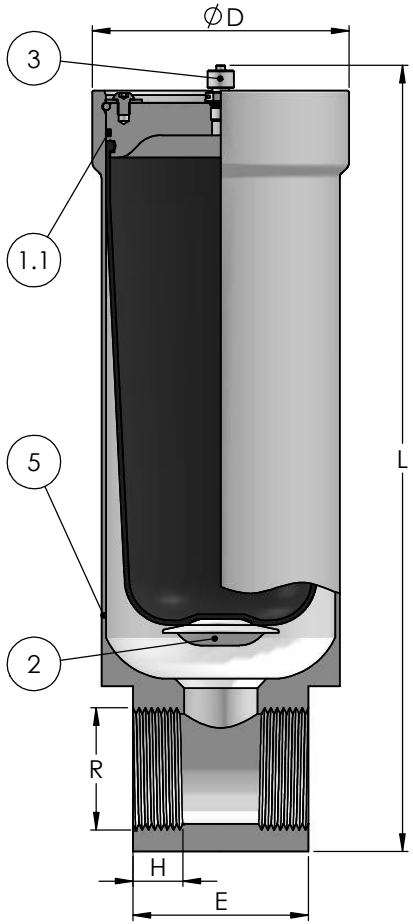

IN LINE TWO CONNECTION PORTS

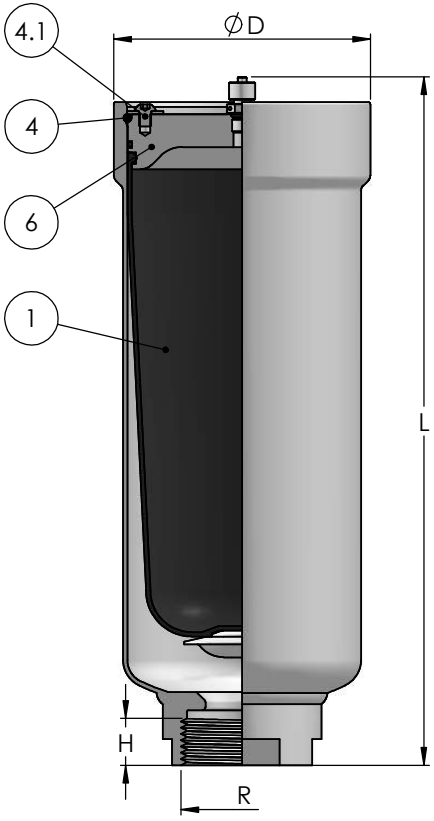

BIG BORE

Wall thickness acc. to EN14359 code
Hydrostatic test pressure @ 1.43 x Design pressure @ 20ºC

FOR HIGHER PRESSURES, SIZES, MATERIALS AND THREADED CONNECTIONS, PLEASE CONSULT

PULSATION DAMPENER MODEL	VOLUME (liters)	DESIGN PRESSURE (bar-g @ 50ºC)	D (mm)	E (mm)	L (mm) TWO PORTS	L (mm) BIG BORE	R (BSP)	H (mm)	WEIGHT (kg) TWO PORTS	WEIGHT (kg) BIG BORE	K VALUE
U007A05X#-AI/X	0.65	50	88	66	231	-	1"	22	3.5	-	3.5
U010A04X#-AI/X	0.95	40	113	81	251	220	1-1/2"	24	6.0	4.8	3.0
*U015A04X#-AI/X	1.50				298	267			6.6	5.1	3.5
U030A03X#-AI/X	2.60	30	140	100	346	310	2"	26	11.0	6.4	
*U040A03X#-AI/X	3.80				449	413			11.5	7.2	4.5
*U060A04X#-AI/X	5.60	40	167	120	506	442	2-1/2"	33	19.5	12.0	
*U100A03X#-AI/X	10.40	30	217	155	547	445	4"		38.0	18.0	4.0
*U150A03X#-AI/X	15.00				757	655			42.0	22.0	4.5
*U250A02X#-AI/X	27.00	20	270	212	780	754			63.0	31.0	4.0
*U350A02X#-AI/X	34.50		302		860	766					2.5

REFERENCE CODE IDENTIFICATION

Rubber bladder X = N (NBR), B (BUTYL), E (EPDM) or V (FKM)
Connection ports # = 1 (One connection port) or 2 (Two connection ports)
Special connection X = BB (Big Bore connection)

Rubbers Max. Working Temperatures (ºC)	N	B	E	*V
	+80 -15	+100 -30	+130 -30	+135 -20

Working Temperatures Versus Working Pressures

For a temperature of 80ºC correspond design pressure x 0.87
" " " " 100ºC " " " x 0.82
" " " " 135ºC " " " x 0.76

THE MAX. WORKING TEMPERATURE CAN BE REDUCED DEPENDING ON THE LIQUID IN CONTACT

Nº	ITEM	QT.	MATERIAL
1	BLADDER	1	NBR, BUTYL, EPDM & FKM
1.1	"O" RING	1	NBR, BUTYL, EPDM & FKM
2	INSERT	1	*PVDF or Titanium
3	INFLATING N2 VALVE	1	AISI 316L (1/4" BSP)
4	RETAINING RING	1	AISI 316
4.1	BOLTS	4	DIN 912 & 934 A4-70
5	BODY	1	AISI 316L
6	COVER	1	AISI 316L

To perform maintenance on our bladder pulsation dampers, we recommend replacing the following parts: **Bladder + Insert** (**ref. 1+2** in general drawings), **O-ring** (**ref. 1.1** in general drawings) and the **charging valve** (**ref. 3** in general drawings).
These components are essential to ensure proper operation and longevity of the damper. Make sure to follow the dismantling instructions and use our tools to perform the maintenance safely and effectively **(ref. DRB.A/B)**.

The **Charging valve** can have three different references:

- **004-AI-BP** (for charging valves with Vg8 connection)
- **004-AI** (for dampers with a design pressure below 140 barg)
- **004-AI-MAP** (for dampers with a design pressure equal to or greater than 140 barg)

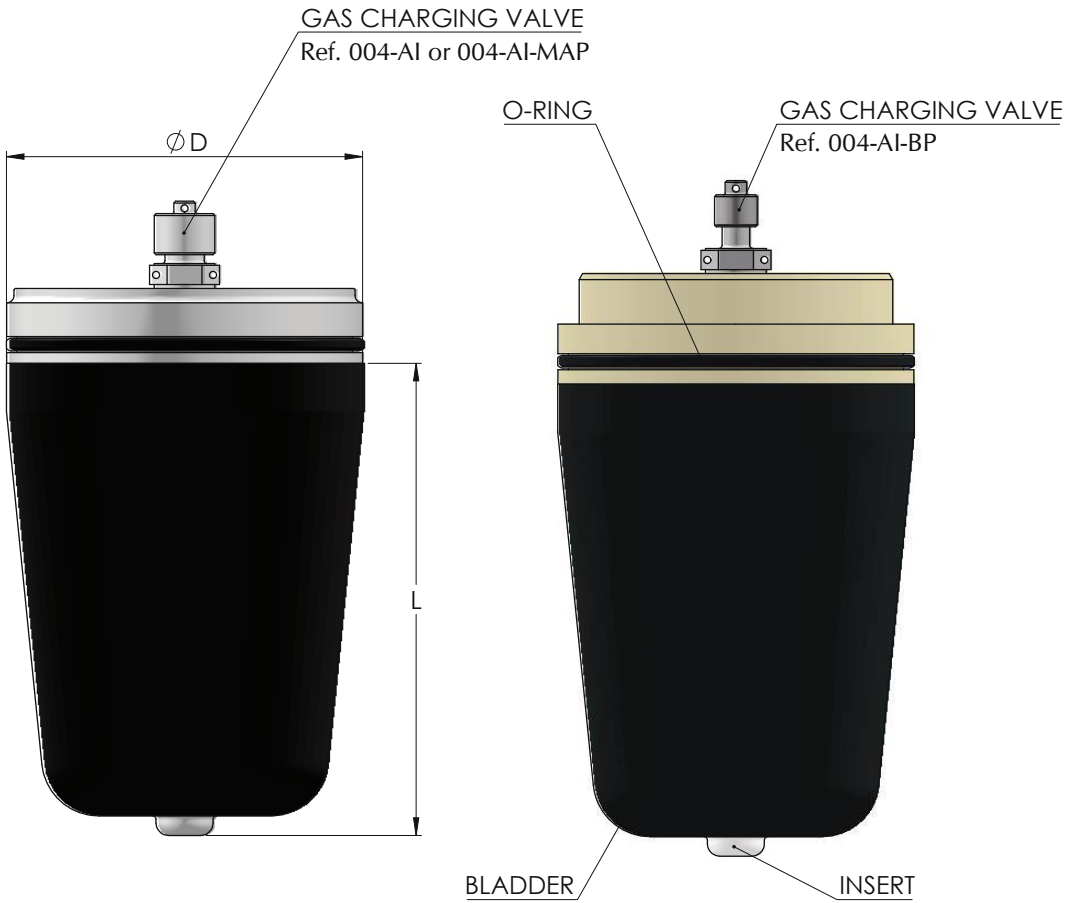

FOR DAMPENER MODEL	BLADDER REF.	L (mm)	D (mm)	O-RING REF.	AI/AP insert if design pressure ≥ (barg)
U000	U000X-X or U000X (plastic)	28	45	HC2129-X	-
U001	U001X-X	50			610
U002	U002X-X	70	60	HC2138-X	520
U003	U003X-X	95	70	HC2230-X	410
U006	U006X-X	168			
U007	U007X-X	135	80	HC2233-X	320
U010	U010X-X	135	100	HC2239-X	
U015	U015X-X	180			
U030	U030X-X	220	125	HC2247-X	290
U040	U040X-X	310			
U060	U060X-X	325	150	HC2255-X	270
U100	U100X-X	330	200	HC2367-X	260
U150	U150X-X or U100X-TF (plastic)	520			
U200	U100X-TF (plastic)				-
U250	U250X-X	530	250	HC2375-X	-
U350				HC2274-X	-

REFERENCE CODE IDENTIFICATION

Rubber bladder X = N (NBR), R (NBR for low temperature), G (Hydrogenated NBR), B (IIR), E (EPDM), V (FKM), L (FKM for low temperature), F (Fluorinated FKM), H (Hypalon), A (FEPM)

Insert X = AI (SS 316L), AI/AP (SS 316L)(for high pressures), AI/BB (SS 316L)(for big bore connections), DU (duplex) or TF (PTFE)

BLADDER REF. CODE	COMPOUND	HARDNESS ShA	MAX. WORKING TEMPERATURE (ºC)	MIN. WORKING TEMPERATURE (ºC)
N	NB5904	60	80	-15
R	NB4819	70	100	-50
G	HN4164	60	130	-15
B	IIR5389	55	100	-30
E	EP5403	60	130	-30
V	FK0970	60	150	-20
L	FK9060	65	150	-50
F	FK9193	70	150	-30
A	FK9386	65	180	-20
H	CS1794	65	130	-30

THE MAX. WORKING TEMPERATURE CAN BE REDUCED DEPENDING ON THE LIQUID IN CONTACT

HIDRACAR S.A.
Pol.Ind.Bufalvent C/Ramon Farguell 73-77
08243 Manresa (Barcelona)- Spain
T. +34 938 330 252
hidracar@hidracar.com
www.hidracar.com

DATA SHEET	REFERENCE:	REV:	DATE:	DRAWN	APPROVED
REPAIR KIT FOR BLADDER DAMPENERS	AV.RP.KIT.IN.DOC	03	JUN-26	P.BASCOMPTA	M.CARCARÉ

HIDRACAR S.A.
Pol.Ind.Bufalvent C/Ramon Farguell 73-77
08243 Manresa (Barcelona)- Spain
T. +34 938 330 252
hidracar@hidracar.com
www.hidracar.com

DATA SHEET	REFERENCE:	REV:	DATE:	DRAWN	APPROVED
PTFE BELLOWS PULSATION DAMPENER, SS BODY & NOZZLE	AFT.AI.BP.IN.DOC	26	NOV-24	P.BASCOMPTA	E.CORTINA

NOTE: Those pulsation dampener ought to be filed with gas at 90% of the working pressure. It shall be done at the working temperature. Can be done with compressed air if it is compatible with the liquid pumped. Use a tire inflating air tool. If need to be charged with N2, use our valve Ref. 004-AI (1/4"BSP) and our charging kit Ref. BVXXXA1TM.

ATTENTION! ALWAYS MUST BE MOUNTED VERTICALLY (VALVE 3 ON TOP)

Value of "K" : $\frac{\text{Maxi. Pressure}}{\text{Filling gas Pressure}} \leq$ K (@Constant Temp.)

TOLERANCES: External dimentions: ±3% Volume: ±2.5% Weight: ±5%

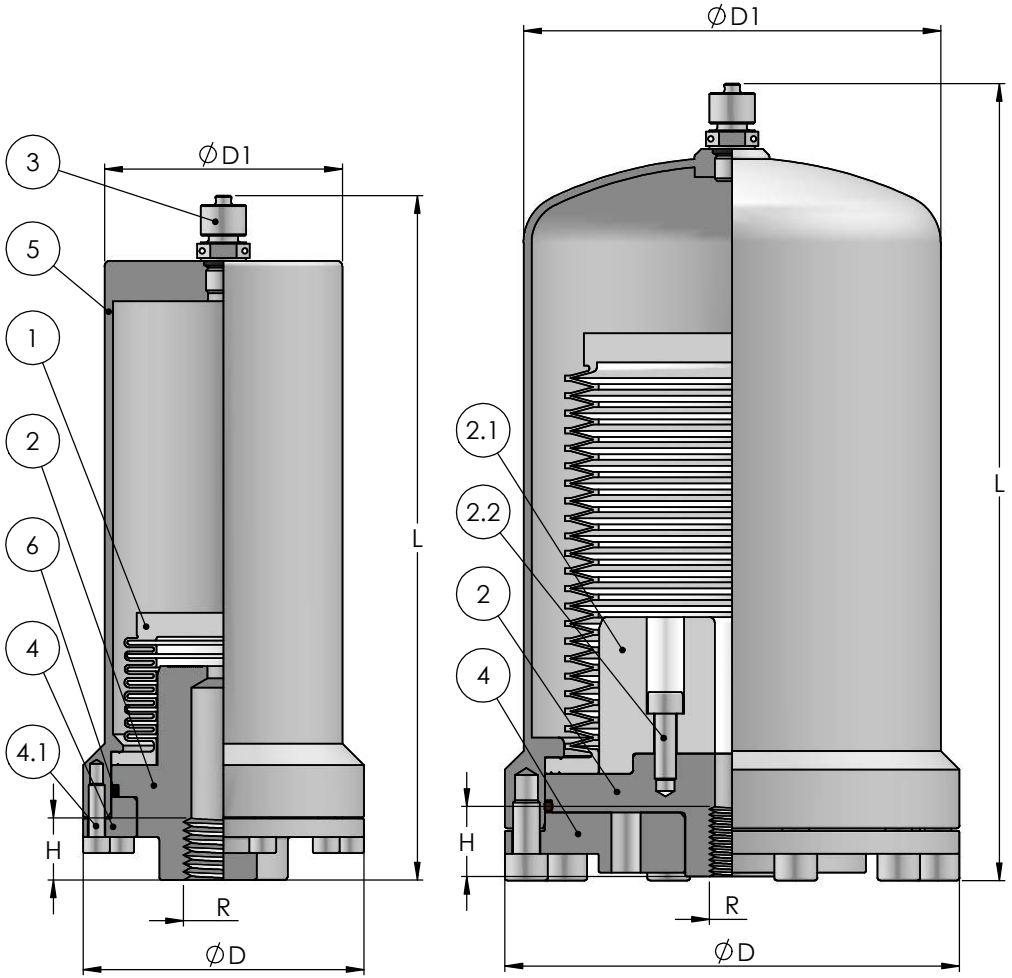

F002 to F015 F030 to F150

Wall thickness acc. to EN14359 code
Hydrostatic test pressure @ 1.43 x Design pressure @ 20ºC

FOR HIGHER PRESSURE, SIZES, MATERIALS AND THREADED CONNECTIONS, PLEASE CONSULT

PULSATION DAMPENER MODEL	MAX. △V ADMITED (c.c.)**	VOLUME (litres)	DESIGN PRESSURE (bar-g @ 50ºC)	D (mm)	D1 (mm)	L (mm)	R (BSP)	H (mm)	WEIGHT (kg)	K VALUE
F002A09T1-AI	12	0.15	90	70	60	185	1/2"	18	1.4	1.2
F003A05T1-AI	20	0.30	50	84	64	217			2.2	
F007A06T1-AI	80	0.70	60	105	89	256	3/4"	24	4.1	
F015A05T1-AI	450	1.50	50	130	114	290		25	6.6	1.6
F030A04T1-AI	950	2.60	40	170	156	298	1"		10.6	1.8
F040A04T1-AI	1000	3.80				360			11.0	1.6
F060A04T1-AI	850	5.60				500			12.3	1.3
F100A03T1-AI	2400	10.00	30	250	206	492	2"	35	24.0	1.5
F150A03T1-AI	2900	15.00				671			26.0	1.4

** △V≥C/2 for a single head pump ("C" = Head pump volume)
△V≥C/5 for a duplex heads pump
△V≥C/12 for a three heads pump

WORKING LIMITS TEMPERATURES(ºC): -40 / +200 ºC

Working Temperatures Versus Working Pressures

For a temperature of 100ºC correspond design pressure x 0.82
" " " " 150ºC " " " x 0.75
" " " " 200ºC " " " x 0.68

THE MAX. WORKING TEMPERATURE CAN BE REDUCED DEPENDING ON THE LIQUID IN CONTACT

Nº	ITEM	QT.	MATERIAL
1	BELLOWS	1	PTFE
2	NOZZLE	1	AISI 316L (and others available)
2.1	GUIDING NOZZLE	1	PTFE
2.2	BOLTS	3	DIN 912 A4-70
3	INFLATING N2 VALVE	1	AISI 316L (1/4" BSP)
4	RETAINING NUT	1	AISI 316L
4.1	BOLTS	7 to 10	DIN 912 A4-70
5	BODY	1	AISI 316L
6	SEAL GASKET	1	SILICONE

HIDRACAR S.A.
Pol.Ind.Bufalvent C/Ramon Farguell 73-77
08243 Manresa (Barcelona)- Spain
T. +34 938 330 252
hidracar@hidracar.com
www.hidracar.com

DATA SHEET	REFERENCE:	REV:	DATE:	DRAWN	APPROVED
PTFE BELLOWS PULSATION DAMPENER, SS BODY & PLASTIC NOZZLE	AFT.AI.BP.IN.PL.DOC	27	NOV-24	P.BASCOMPTA	E.CORTINA

NOTE: Those pulsation dampener ought to be filed with gas at 90% of the working pressure. It shall be done at the working temperature. Can be done with compressed air if it is compatible with the liquid pumped. Use a tire inflating air tool. If need to be charged with N2, use our valve Ref. 004-AI (1/4"BSP) and our charging kit Ref. BVXXXA1TM.

ATTENTION! ALWAYS MUST BE MOUNTED VERTICALLY (VALVE 3 ON TOP)

Value of "K" : $\frac{\text{Maxi. Pressure}}{\text{Filling gas Pressure}} \leq$ K (@Constant Temp.)

TOLERANCES: External dimentions: ±3% Volume: ±2.5% Weight: ±5%

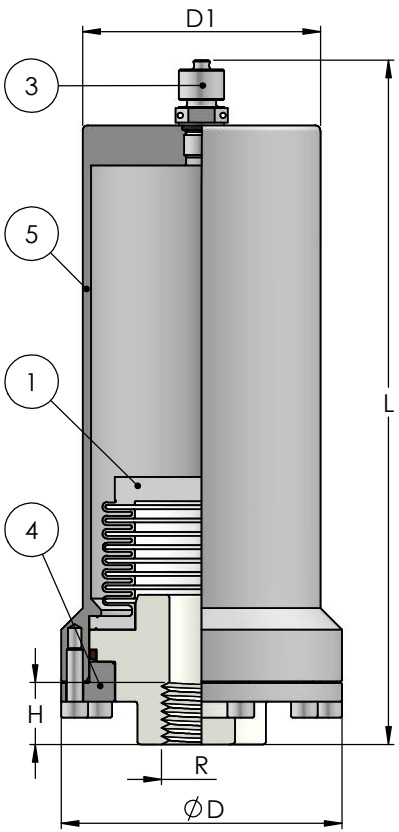

F002 to F015

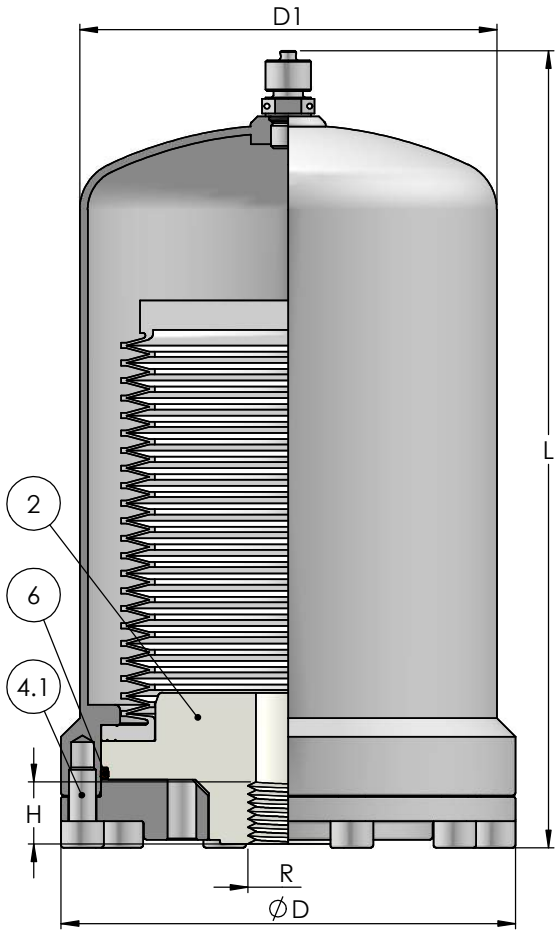

F030 to F150

Wall thickness acc. to EN14359 code
Hydrostatic test pressure @ 1.43 x Design pressure @ 20ºC

FOR HIGHER PRESSURES, SIZES, MATERIALS AND THREADED CONNECTIONS, PLEASE CONSULT

PULSATION DAMPENER MODEL	MAX. △V ADMITED (c.c.)**	VOLUME (litres)	D (mm)	D1 (mm)	L (mm)	R (BSP)	H (mm)	WEIGHT (kg)	K VALUE
F002A02T1-AI/X	12	0.15	70	60	185	1/2"	16	1.4	1.2
F003A02T1-AI/X	20	0.30	84	64	217			2.2	
F007A02T1-AI/X	80	0.70	105	89	256	3/4"	25	4.1	
F015A02T1-AI/X	450	1.50	130	114	290			5.2	1.6
F030A02T1-AI/X	950	2.60	170	156	298	1"	27	10.6	1.8
F040A02T1-AI/X	1000	3.80			360			11.0	1.6
F060A02T1-AI/X	850	5.60			500			12.3	1.3
F100A02T1-AI/X	2400	10.00	250	206	492	2"	35	24.0	1.5
F150A02T1-AI/X	2900	15.00			671			26.0	1.4

REFERENCE CODE IDENTIFICATION

Connection wetted part X = TF (PTFE), PE (Polyethylene), PC (PVC) or PD (PVDF)

** △V ≥C/2 for a single head pump ("C" = Head pump volume)
△V ≥C/5 for a duplex heads pump
△V ≥C/12 for a three heads pump

MAX. WORKING PRESSURE: 20 bar-g

Working Temperatures Versus Working Pressures

For a temperature of 100ºC correspond design pressure x 0.82
" " " " 150ºC " " " x 0.75
" " " " 200ºC " " " x 0.68

WORKING LIMITS TEMPERATURES(ºC): (0º / +60ºC for PVC)
(-15º / +70ºC for PVDF & PE)
(-40º / +200ºC for PTFE)

THE MAX. WORKING TEMPERATURE CAN BE REDUCED DEPENDING ON THE LIQUID IN CONTACT

Nº	ITEM	QT.	MATERIAL
1	BELLOWS	1	PTFE
2	NOZZLE	1	PTFE, PE, PVC, PVDF
3	INFLATING N2 VALVE	1	AISI 316L (1/4" BSP)
4	RETAINING NUT	1	AISI 316L
4.1	BOLTS	7 to 10	DIN 912 A4-70
5	BODY	1	AISI 316L
6	SEAL GASKET	1	SILICONE

HIDRACAR S.A.
Pol.Ind.Bufalvent C/Ramon Farguell 73-77
08243 Manresa (Barcelona)- Spain
T. +34 938 330 252
hidracar@hidracar.com
www.hidracar.com

DATA SHEET	REFERENCE:	REV:	DATE:	DRAWN	APPROVED
S.S. & PLASTIC BELLOWS ACTIVE DAMPENERS	AFT.ACT.AI.PL.IN.DOC	00	FEB-25	P.BASCOMPTA	E.CORTINA

The ACTIVE pulsation dampener with automatic precharge adjustment is ideal for AODD pumps and variable pressure requirement. Available in bellows (F series) or membrane (M series) dampeners, it is automatically precharged based on working pressure conditions, ensuring efficient and reliable performance.

TOLERANCES: External dimentions: ±3% Volume: ±2.5% Weight: ±5%

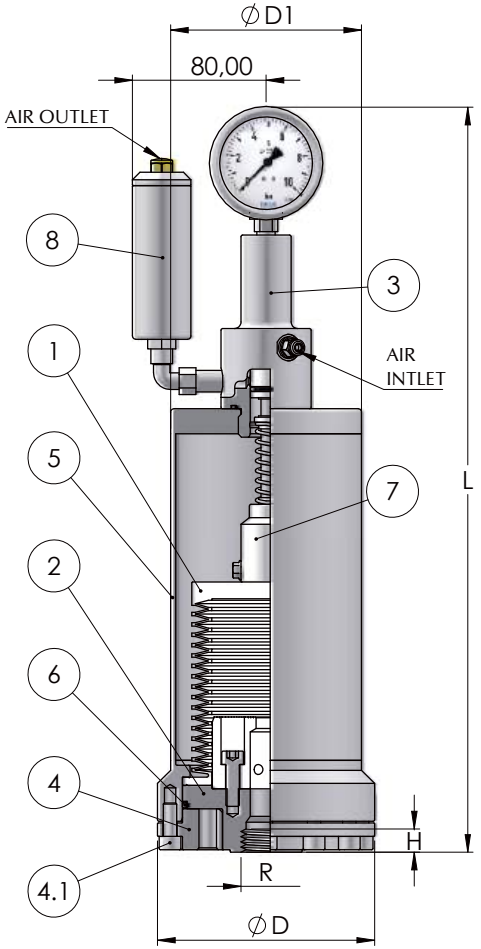

Fig S

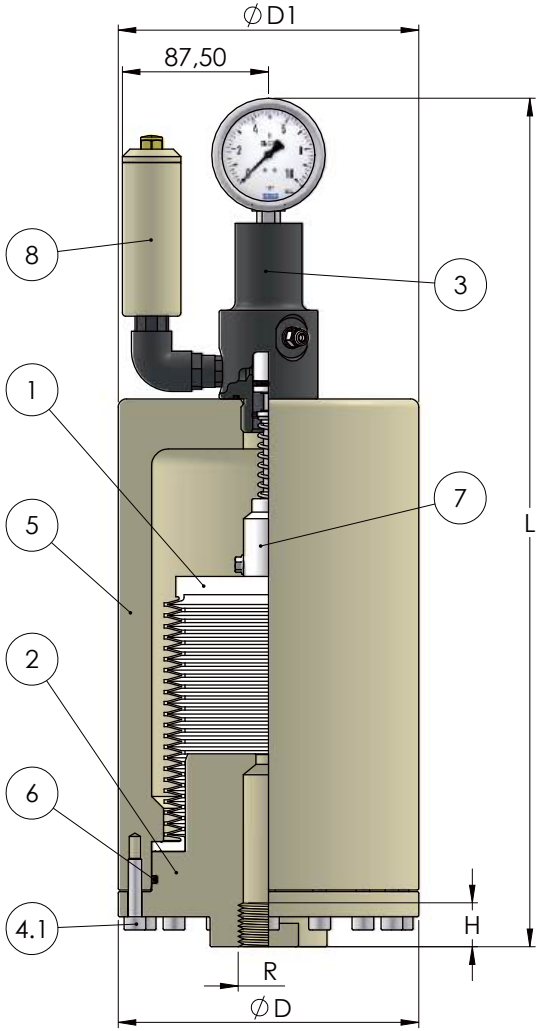

Fig P

Wall thickness acc. to EN14359 code
Hydrostatic test pressure @ 1.43 x Design pressure @ 20ºC

FOR HIGHER PRESSURES, TEMPERATURES AND OTHER CONNECTIONS PORTS, PLEASE CONSULT.

PULSATION DAMPENER MODEL	VOLUME	DESIGN PRESSURE (bar-g @-40/200ºC)	D (mm)	D1 (mm)	L (mm)	R (BSP)	H (mm)	WEIGHT (kg)
STAINLESS STEEL BODY								
F007A06T1-AI-ACT	0.70	20	105	89	411	3/4"	24	6.1
F015A05T1-AI-ACT	1.50		130	114	445		25	8.6
F030A04T1-AI-ACT	2.60		170	156	453	1"		12.6
F040A04T1-AI-ACT	3.80				515			13.0
F060A04T1-AI-ACT	5.60				655			14.3
F100A03T1-AI-ACT	10.00		250	206	647	2"	35	26.0
PULSATION DAMPENER MODEL	**VOLUME**	**DESIGN PRESSURE (bar-g @ 0/60ºC)**	**D (mm)**	**D1 (mm)**	**L (mm)**	**R (BSP)**	**H (mm)**	**WEIGHT (kg)**
PLASTIC BODY								
F007A01T1-PP-ACT	0.70	10	114	100	425	3/4"	22	-
F015A01T1-PP-ACT	1.50		140	140	452	1"	28	6.8
F030A01T1-PP-ACT	2.60		180	180	504			-
F040A01T1-PP-ACT	3.80				595			-
F060A01T1-PP-ACT	5.60				670			-
F100A01T1-PP-ACT	10.00		250	250	703	2"	35	14.0

Fig S. WORKING LIMIT TEMPERATURES FOR STAINLESS STEEL BELLOWS DAMPENERS: -40 / +200ºC
Fig P. WORKING LIMIT TEMPERATURES FOR PLASTIC BELLOWS DAMPENERS: 0 / +60ºC

Nº	ITEM	QT.	MATERIAL	
			SS	PLASTIC
1	BELLOWS	1	PTFE (TFM1705)	PTFE (TFM1705)
2	NOZZLE	1	AISI 316L	PP/PVC/PVDF or PTFE
3	ACTIVE VALVE	1	AISI 316L	PVC
4	RETAINING NUT	1	AISI 316L	-
4.1	BOLTS	7 to 16	DIN 912 A4-70	DIN 912 A4-70
5	BODY	1	AISI 316L	PP
6	SEAL GASKET	1	SILICONE	SILICONE
7	ACTIVE KIT	1	PTFE, AISI 316L & NBR	PTFE, AISI 316L & NBR
8	LIQUID RETENTION VALVE	1	AISI 316L	PP

HIDRACAR S.A.
Pol.Ind.Bufalvent C/Ramon Farguell 73-77
08243 Manresa (Barcelona)- Spain
T. +34 938 330 252
hidracar@hidracar.com
www.hidracar.com

DATA SHEET PULSATION DAMPENER WITH SS BELLOWS & BODY	REFERENCE:	REV:	DATE:	DRAWN	APPROVED
	AFI.AI.BP.IN.DOC	04	SEP-24	P.BASCOMPTA	E.CORTINA

NOTE: Those pulsation dampener ought to be filed with gas at 90% of the working pressure. It shall be done at the working temperature. Can be done with compressed air if it is compatible with the liquid pumped. Use a tire inflating air tool. If need to be charged with N2, use our valve Ref. 004-AI (1/4"BSP) and our charging kit Ref. BVXXXA1TM.

ATTENTION! ALWAYS MUST BE MOUNTED VERTICALLY (VALVE 3 ON TOP)

TOLERANCES: External dimentions: ±3% Volume: ±2.5% Weight: ±5%

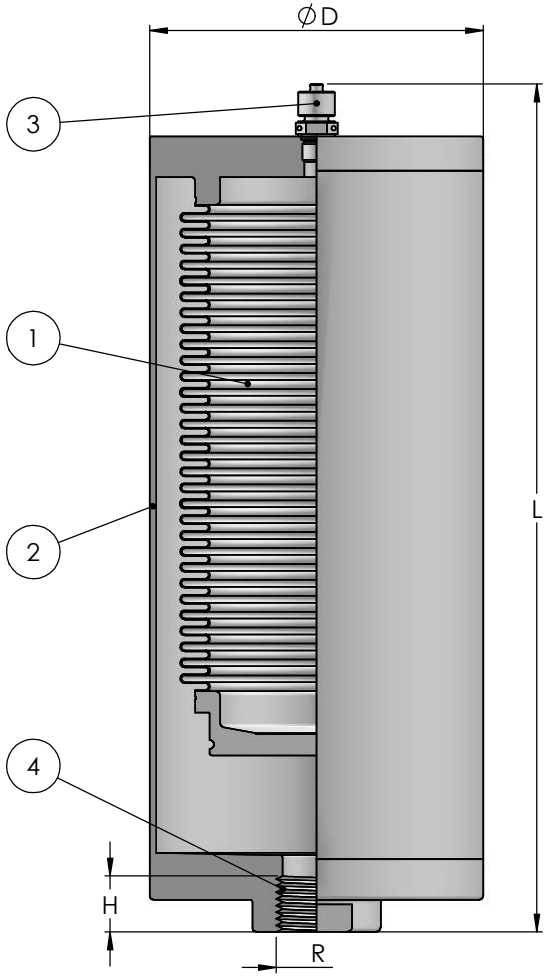

Wall thickness acc. to EN14359 code
Hydrostatic test pressure @ 1.43 x Design pressure @ 20ºC

FOR HIGHER PRESSURES, SIZES, MATERIALS AND THREADED CONNECTIONS, PLEASE CONSULT

PULSATION DAMPENER MODEL	MAX. △V ADMITED (c.c.)**	VOLUME (litres)	DESIGN PRESSURE (bar-g)	D (mm)	L (mm)	R (BSP)	FLANGE DN (Optional)	H (mm)	WEIGHT (kg)
F007A05I1-AI	168	0.70	50	84	250	1/2"	1/2"	16	3.5
F015A04I1-AI	418	1.45	40	104	370	3/4"	3/4"	25	5
F030A03I1-AI	800	2.40	30	156	375	1"	1"	27	15
F040A03I1-AI	1200	3.70			472				10.6
F060A04I1-AI	1850	6.00	40	156	576	1-1/2"	1-1/2"	35	12
F100A03I1-AI	3500	10.20	30	218	586	2"	2"		12.3
F150A03I1-AI	4400	15.00			783				24.0

Precharge pressure ≤ 16 bar-g @ 20ºC
Precharge pressure limited by the separator element (bellows)

**△V ≥ C/2 for a single head pump ("C" = Head pump volume)
△V ≥ C/5 for a duplex heads pump
△V ≥ C/12 for a three heads pump

WORKING LIMITS TEMPERATURES(ºC): -50 / +300 ºC

Working Temperatures Versus Working Pressures

For a temperature of 100ºC correspond design pressure x 0.82
" " " " 200ºC " " " x 0.68
" " " " 300ºC " " " x 0.59

For higher pressures and for variable working pressures and/or temperatures, HIDRACAR has special designs. Please consult.

Nº	ITEM	QT.	MATERIAL
1	BELLOWS	1	AISI 316Ti
2	BODY	1	AISI 316L
3	INFLATING N2 VALVE	1	AISI 316L (1/4" BSP)
4	THREADED CONNECTION	1	AISI 316L

HIDRACAR S.A.
Pol.Ind.Bufalvent C/Ramon Farguell 73-77
08243 Manresa (Barcelona)- Spain
T. +34 938 330 252
hidracar@hidracar.com
www.hidracar.com

DATA SHEET	REFERENCE:	REV:	DATE:	DRAWN	APPROVED
S.S PULSATION DAMPENER DOUBLE MEMBRANE	AM.AI.BP.IN.DOC.	30	NOV-24	P.BASCOMPTA	E.CORTINA

NOTE: Those pulsation dampener ought to be filed with gas at 90% of the working pressure. It shall be done at the working temperature. Can be done with compressed air if it is compatible with the liquid pumped. Use a tire inflating air tool. If need to be charged with N2, use our valve Ref. 004-AI (1/4"BSP) and our charging kit Ref. BVXXXA1TM.

ATTENTION! ALWAYS MUST BE MOUNTED VERTICALLY (VALVE 3 ON TOP)

Value of "K" : $\frac{\text{Maxi. Pressure}}{\text{Filling gas Pressure}} \leq 2$ (@Constant Temp.)

** In these models the value of "K" ≤ 1.5 (@Constant Temp.)

TOLERANCES: External dimentions: ±3% Volume: ±2.5% Weight: ±5%

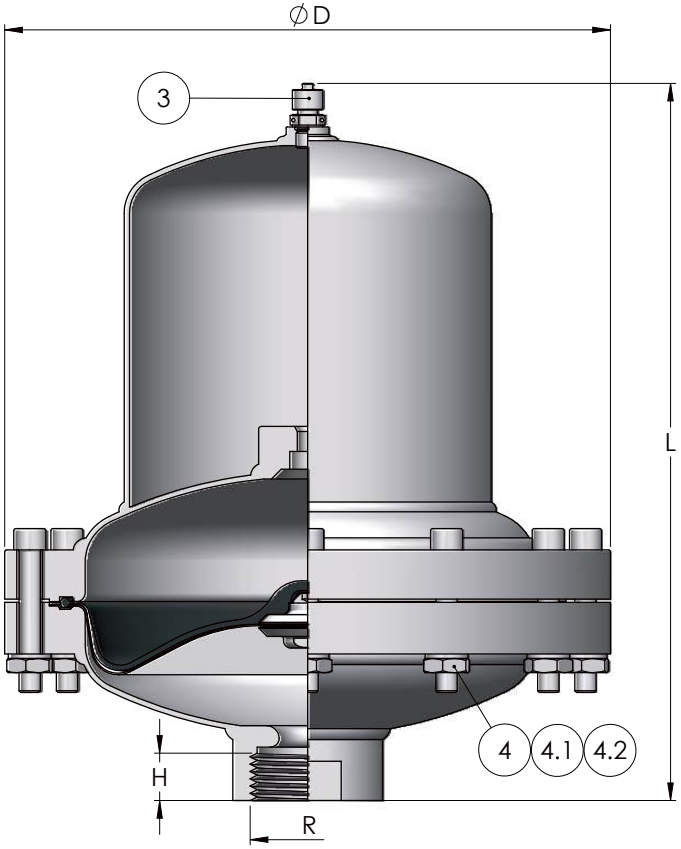

M040 & M100

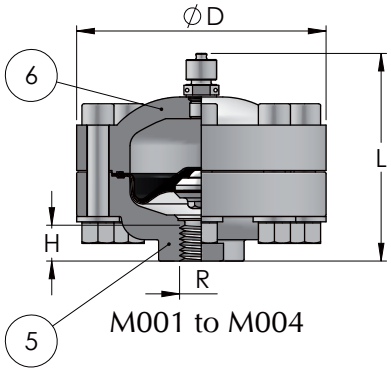

M001 to M004

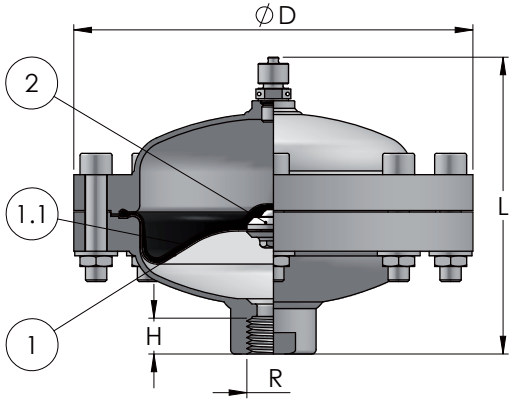

M008 to M030 & M060

Wall thickness acc. to EN14359 code
Hydrostatic test pressure @ 1.43 x Design pressure @ 20ºC

FOR HIGHER PRESSURES, SIZES, MATERIALS AND THREADED CONNECTIONS, PLEASE CONSULT

PULSATION DAMPENER MODEL	VOLUME (liters)	DESIGN PRESSURE (bar-g @ 50ºC)	D (mm)	L (mm)	R (BSP)	H (mm)	WEIGHT (kg)
M001A15D1-AI	0.08	150	99	93	3/8"	16	1.7
M002A20D1-AI	0.2	200	140	116	1/2"	14	5.2
M004A10D1-AI	0.4	100	160	121		16	9.2
M008A05D1-AI	0.8	50	180	147	3/4"	20	4.7
M012A04D1-AI	1.2	34	224	167			7.5
M030A03D1-AI	2.8	25	289	188	1-1/2"	30	15.5
**M040A03D1-AI	4.0			273			17.0
M060A02D1-AI	5.6	20	340	213	2"		24.5
**M100A02D1-AI	10.0			403			26.0

WORKING LIMITS TEMPERATURES: -20ºC to +200ºC

Working Temperatures Versus Working Pressures

For a temperature of 80ºC correspond design pressure x 0.87
" " " " 200ºC " " " x 0.68

THE MAX. WORKING TEMPERATURE CAN BE REDUCED DEPENDING ON THE LIQUID IN CONTACT

Nº	ITEM	QT.	MATERIAL
1	MEMBRANE	1	PTFE (TFM1705)
1.1	MEMBRANE	1	FKM
2	INSERT (button)	1	AISI 316L
3	INFLATING N2 VALVE	1	AISI 316L (1/4" BSP)
4	BOLTS	8 to 12	DIN 912 A4-70
4.1	WASHERS	8 to 12	DIN 125 A4-70
4.2	NUTS	8 to 12	DIN 934 A4-70
5	LOWER SHELL	1	AISI 316L
6	UPPER SHELL	1	AISI 316L

HIDRACAR S.A.
Pol.Ind.Bufalvent C/Ramon Farguell 73-77
08243 Manresa (Barcelona)- Spain
T. +34 938 330 252
hidracar@hidracar.com
www.hidracar.com

DATA SHEET	REFERENCE:	REV:	DATE:	DRAWN	APPROVED
S.S. & PLASTIC MEMBRANE ACTIVE DAMPENERS	AM.ACT.AI.PL.IN.DOC	00	FEB-25	P.BASCOMPTA	E.CORTINA

The ACTIVE pulsation dampener with automatic precharge adjustment is ideal for AODD pumps and variable pressure requirement. Available in bellows (F series) or membrane (M series) dampeners, it is automatically precharged based on working pressure conditions, ensuring efficient and reliable performance.

TOLERANCES: External dimentions: ±3% Volume: ±2.5% Weight: ±5%

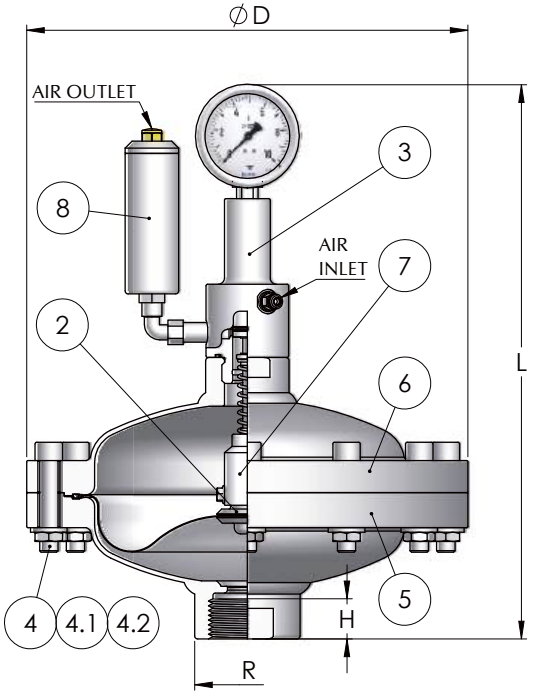

Fig S

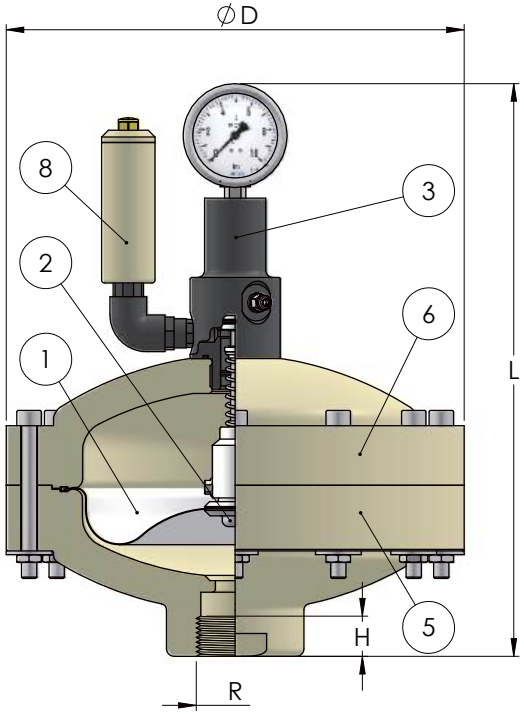

Fig P

Wall thickness acc. to EN14359 code
Hydrostatic test pressure @ 1.43 x Design pressure @ 20ºC

FOR HIGHER PRESSURES, TEMPERATURES AND OTHER CONNECTIONS PORTS, PLEASE CONSULT.

PULSATION DAMPENER MODEL	VOLUME	DESIGN PRESSURE (bar-g @ -20/200ºC)	D (mm)	L (mm)	R (BSP)	H (mm)	WEIGHT (kg)
STAINLESS STEEL BODY							
M008A05T1-AI-ACT	0.8	20	180	323	3/4"	20	6.7
M012A04T1-AI-ACT	1.2		224	343			9.5
M030A03T1-AI-ACT	2.8		289	364	1-1/2"	30	17.0
M040A03T1-AI-ACT	4.0			449			18.5
M060A02T1-AI-ACT	5.6		340	389	2"		27.0

PULSATION DAMPENER MODEL	VOLUME	DESIGN PRESSURE (bar-g @ 0/60ºC)	D (mm)	L (mm)	R (BSP)	H (mm)	WEIGHT (kg)
PLASTIC BODY							
M008A01T1-PP-ACT	0.8	10	190	308	3/4"	18	4.5
M012A01T1-PP-ACT	1.2		225	328		21	-
M030A01T1-PP-ACT	2.8		300	375	1-1/2"	39	7
M060A01T1-PP-ACT	5.6		350	393	2"	32	12

Fig S. WORKING LIMIT TEMPERATURES FOR STAINLESS STEEL MEMBRANE DAMPENERS: -20 / +200ºC
Fig P. WORKING LIMIT TEMPERATURES FOR PLASTIC MEMBRANE DAMPENERS: 0 / +60ºC

Nº	ITEM	QT.	MATERIAL	
			SS	PLASTIC
1	MEMBRANE	1	PTFE (TFM1705)	PTFE (TFM1705)
2	INSERT	1	AISI 316L	AISI 316L
3	ACTIVE VALVE	1	AISI 316L	PVC
4	BOLTS	8 to 12	DIN 912 A4-70	DIN 912 A4-70
4.1	WASHERS	8 to 12	DIN 125 A4-70	DIN 125 A4-70
4.2	NUTS	8 to 12	DIN 934 A4-70	DIN 934 A4-70
5	LOWER SHELL	1	AISI 316L	PP
6	UPPER SHELL	1	AISI 316L	PP
7	ACTIVE KIT	1	PTFE, AISI 316L & NBR	PTFE, AISI 316L & NBR
8	LIQUID RETENTION VALVE	1	AISI 316L	PP

HIDRACAR S.A.
Pol.Ind.Bufalvent C/Ramon Farguell 73-77
08243 Manresa (Barcelona)- Espain
T. +34 938 330 252
hidracar@hidracar.com
www.hidracar.com

DATA SHEET	REFERENCE:	REV:	DATE:	DRAWN	APPROVED
SS. LOW PRESSURE PULSATION DAMPERS WITH IN LINE RUBBER HOSES	AL.AI.BP.IN-LINE.IN.DOC	16	OCT-26	P.BASCOMPTA	E.CORTINA

The In-Line hygienic dampener is the ideal solution for dosing circuits in the food and pharmaceutical industries, as well as for managing high-frequency pressure peaks.

TOLERANCES: External dimentions: ±3% Volume: ±2.5% Weight: ±5%

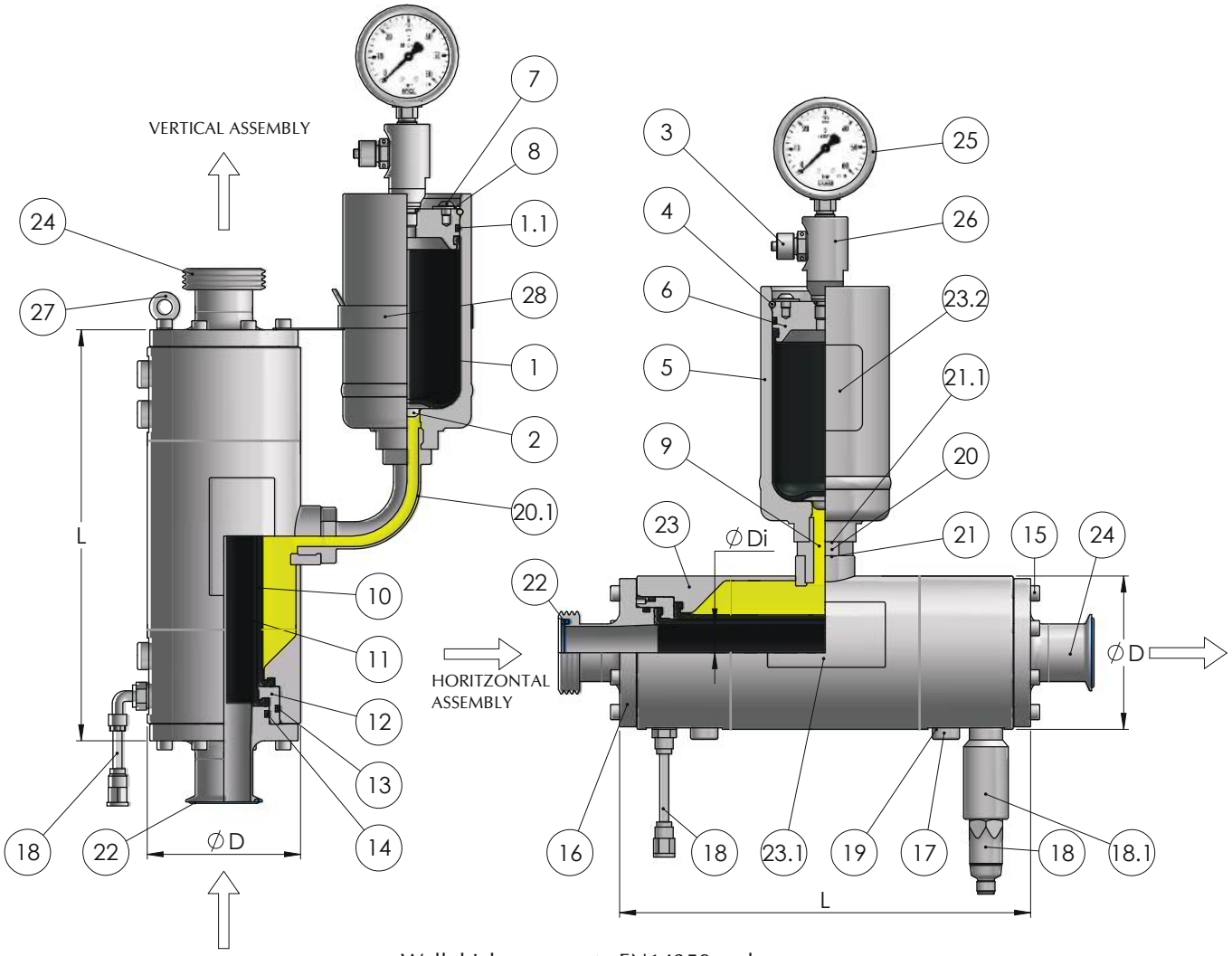

Wall thickness acc. to EN14359 code
Hydrostatic test pressure @ 1.43 x Design pressure @ 20ºC

FOR HIGHER PRESSURES, TEMPERATURES AND OTHER CONNECTIONS PORTS, PLEASE CONSULT.

IN LINE PULSATION TRANSMITTER REF.	BLADDER DAMP. DESIGN PRESSURE (Bar) @ 20ºC	D (mm)	Di (mm)	L (mm)	MAX. VOLUME BLADDER DAMPER REF.
L001A12X2AI/DT	120	88	23	226	U003 (0,36 l)
L002A10X2AI/DT	100	113	37	280	U010 (0,95 l)
L003A09X2AI/DT	90	139	52	319	U015 (1,50 l)
L004A09X2AI/DT		148	68	355	U040 (3,80 l)
L005A03X2AI/DT	30	214	102	480	U100 (10,40l)
L006A02X2AI/DT	20	260	118	559	U150 (15l)

REFERENCE CODE IDENTIFICATION
Rubber Hose X = E (EPDM) or S (SILICONE)

MAX. W. TEMPERATURE: 90ºC IF CLOSED LIQUID ⑨ IS WATER AND GAS FILLING PRESSURE > 2 BAR

WORKING TEMPERATURES VERSUS WORKING PRESSURES
For a temperature of 90ºC correspond design pressure x 0,85

Nº	ITEM	QT.	MATERIAL
1	DAMPENER BLADDER	1	EPDM or SILICONE (FDA)
1.1	O-RING	1	EPDM
2	INSERT	1	AISI 316L
3	CHARGING GAS VALVE	1	AISI 316L (1/4" BSP or Vg8)
4	RETAINING RING	1	AISI 316
5	BODY TOP BLADDER DAMPENER	1	AISI 316L
6	COVER TOP BLADDER DAMPENER	1	AISI 316L
7	BOLT	1 to 4	AISI 316L
8	WASHER	1 to 4	AISI 316L
9	SILICONE OIL (FDA) OR DESTILATED WATER		
10	EXTERNAL RUBBER HOSE	1	EPDM or SILICONE (FDA)
11	INTERNAL RUBBER HOSE	1	EPDM or SILICONE (FDA)
12	SUPPORTING RING	2	AISI 316L
13	O-RING	2	EPDM or SILICONE (FDA)
14	O-RING	2	EPDM or SILICONE (FDA)
15	RETAINING BOLTS	16	AISI 316L
16	FLANGE CONNECTIONS	2	AISI 316L
17	FILLING PLUG 1/4" BSP	2	AISI 316L
18	WINDOWS TUBE OR SENSOR	1	FOR DETECTION HOSE RUPTURE
18.1	PLUG 1/4" BSP PORT CONNECTION	1	AISI316 FOR ELECTRONIC SENSOR
19	SEAL WASHER	4	AISI 316L
20	ADAPTOR	1	AISI 316L
20.1	BENDED TUB ADAPTOR	1	AISI 316L
21	SEAL WASHER	1	AISI 316L
21.1	SEAL WASHER	1	AISI 316L
22	DIN-11851 or ISO-1127 SEAL	2	EPDM or SILICONE (FDA)
23	IN LINE SHELL	1	AISI 316L
23.1	WELD NAMEPLATE	1	AISI 316L
23.2	IDENTIFICATION LABEL	1	ADHESIVE PLASTIC
24	CONNECTION PORTS	2	(ON DEMAND) AISI 316L
25	PRESSURE GAUGE	1	AISI 304
26	"T" ADAPTOR	1	AISI 303
27	HANG EYEBOLT	1	AISI 303
28	BLADDER DAMPENER SUPPORT	1	AISI 303

HIDRACAR S.A.
Pol.Ind.Bufalvent C/Ramon Farguell 73-77
08243 Manresa (Barcelona)- Espain
T. +34 938 330 252
hidracar@hidracar.com
www.hidracar.com

DATA SHEET	REFERENCE:	REV:	DATE:	DRAWN	APPROVED
PLASTIC LOW PRESSURE PULSATION DAMPER WITH IN LINE RUBBER HOSE	AL.PL.BP.IN-LINE.IN.DOC	01	NOV-24	P.BASCOMPTA	E.CORTINA

The In-Line hygienic dampener is the ideal solution for dosing circuits in the food and pharmaceutical industries, as well as for managing high-frequency pressure peaks. This device operates with air at atmospheric pressure, making it particularly effective for suction pump lines.

* This dimension can be variable according the connection type.

TOLERANCES: External dimentions: ±3% Volume: ±2.5% Weight: ±5%

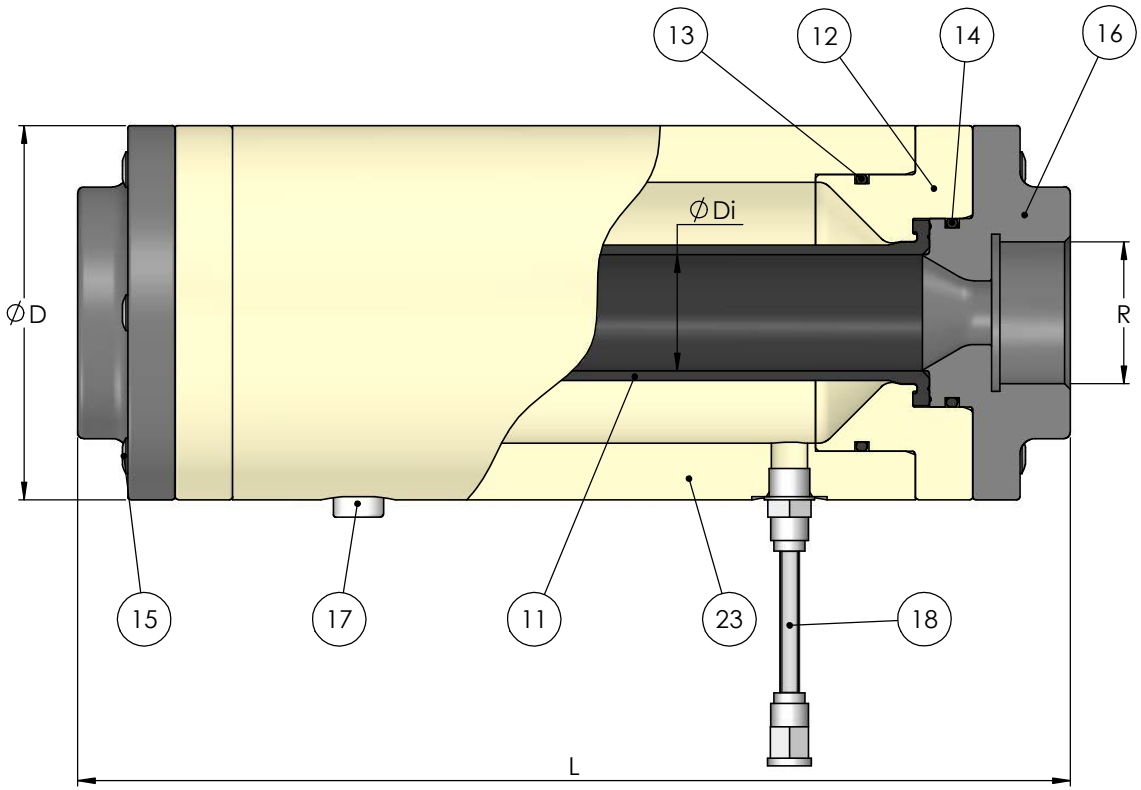

Wall thickness acc. to EN14359 code
Hydrostatic test pressure @ 1.43 x Design pressure @ 20ºC

FOR HIGHER PRESSURES, TEMPERATURES AND OTHER CONNECTIONS PORTS, PLEASE CONSULT.

IN LINE PULSATION TRANSMITTER REF.	CONNECTION PORTS	D (mm)	Di (mm)	L* (mm)	Vo (c.c)	R (BSP)
L001A01X2PL/ST	DN15/DN20		23.4	DEVELOPING		3/4"
L002A01X2PL/ST	DN25	120	37	319.5	745	1"
L002A01X2PL/ST	DN32					1-1/2"
L004A01X2PL/ST	DN40	160	68.5	440.5	1700	2"
L004A01X2PL/ST	DN50					2-1/2"
L004A01X2PL/ST	DN65					3"
L005A01X2PL/ST	DEVELOPING		102	DEVELOPING		
L006A01X2PL/ST			122			

REFERENCE CODE IDENTIFICATION
Rubber Hose X = E (EPDM) or S (SILICONE)

MAXI. WORKING. TEMPERATURE: 60ºC

MAXI. DESIGN PRESSURE : 10 barg @ 20ºC
MAXI. WORKING PRESSURE: 4 barg @ 20ºC

Nº	ITEM	QT.	MATERIAL
11	INTERNAL RUBBER HOSE	1	EPDM or SILICONE (FDA)
12	SUPPORTING RING	2	POLYPROPYLENE
13	O-RING	2	EPDM or SILICONE (FDA)
14	O-RING	2	EPDM or SILICONE (FDA)
15	RETAINING BOLTS	12	AISI 316L
16	FLANGE CONNECTIONS	2	PVC,PP or PVDF
17	FILLING PLUG 1/4" BSP	2	AISI 316L
18	WINDOWS TUBE	1	FOR VISUAL HOSE RUPTURE
23	IN LINE SHELL	1	POLYPROPYLENE

High-Precision Calibration Pots: Maximum Accuracy and Industrial Robustness.

Designed for the precise verification of metering pumps, this system combines a borosilicate glass tube with a robust body and shield made of AISI 316L stainless steel. Absolute accuracy, impact safety, and maximum chemical compatibility in a single unit. Features include a standard scale in c.c. or L/h and an optional flange connection.

TOLERANCES: External dimensions: ±3% Wieght: ±5%

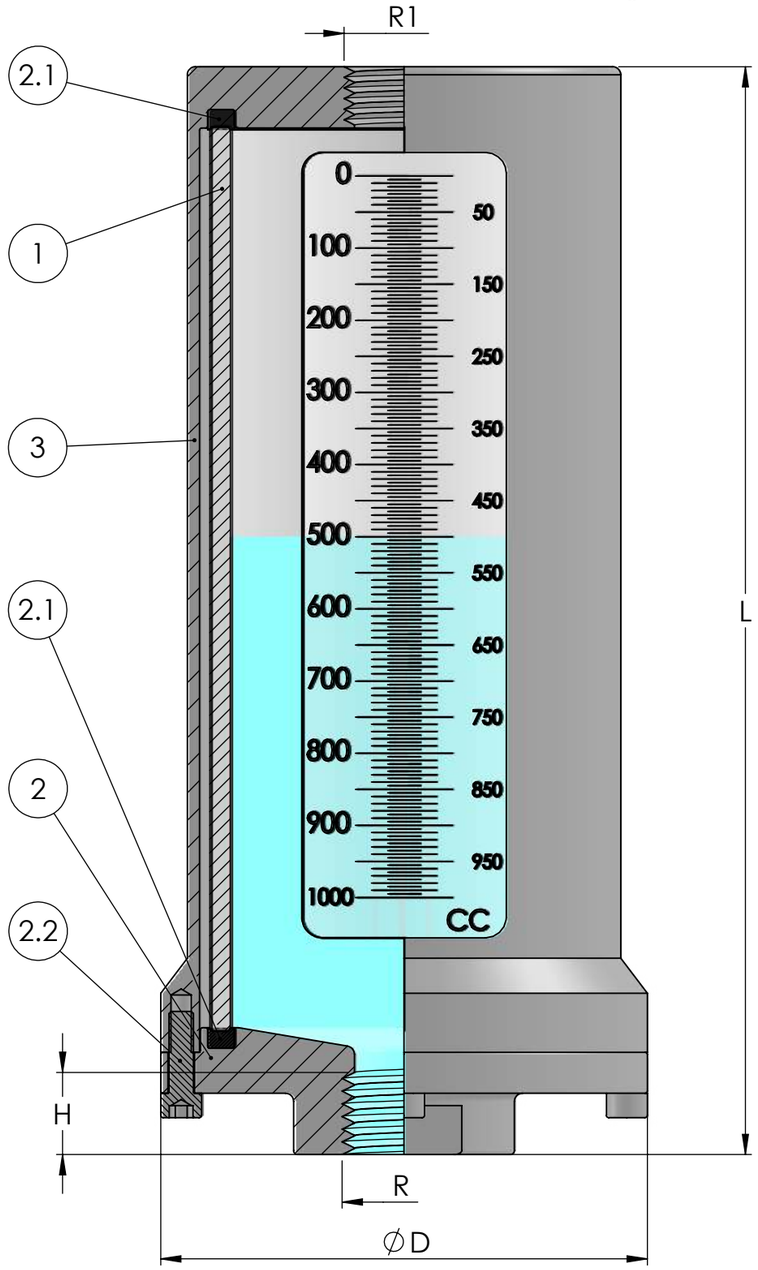

CALIBRATION POT MODEL	VOLUME (liters)	D (mm)	L (mm)	R1 (BSP)	R (BSP)	H (mm)	WEIGHT (kg)
CP001_01X2-AI	0.1	67	147	3/8"	3/8"	15	-
CP002_01X2-AI	0.25	92	195	1/2"	1/2"	16	-
CP005_01X2-AI	0.5		301				-
CP010_01X2-AI	1	119	266	3/4"	3/4"	18	-
CP025_01X2-AI	2.5		528				-
CP050_01X2-AI	5	169	484	1"	1"	22	-
CP100_01X2-AI	10		833		1-1/2"		-
CP150_01X2-AI	15	215	775		2"		-
CP200_01X2-AI	20		980				-
CP300_01X2-AI	30	270	918		3-1/2"		-
CP400_01X2-AI	40		1177				-

REFERENCE CODE IDENTIFICATION

Rubber seals X = N (NBR), B (BUTYL), E (EPDM) or V (FKM)

MAX. WORKING PRESSURE FOR CP001 TO CP200: 5 bar-g at 20ºC
MAX. WORKING PRESSURE FOR CP300 & CP400: 4 bar-g at 20ºC

Working Temperatures Versus Working Pressures

For a temperature of 80ºC correspond design pressure x 0.87
" " " " 100ºC " " " x 0.82
" " " " 130ºC " " " x 0.78
" " " " 150ºC " " " x 0.75

Rubbers Max. Working Temperatures (ºC)

N	B	E	V
+80 -15	+100 -30	+130 -30	+150 -20

THE MAX. WORKING TEMPERATURE CAN BE REDUCED DEPENDING ON THE LIQUID IN CONTACT

Nº	ITEM	QT.	MATERIAL
3	BODY SHIELD	1	AISI 316L
2.2	BOLTS	4	DIN 912 A4-70
2.1	O-RING	2	NBR, BUTYL, EPDM & FKM
2	CONNECTION COVER	1	AISI 316L
1	GLASS	1	BOROSILICATE

HIDRACAR S.A.
Pol.Ind.Bufalvent C/Ramon Farguell 73-77
08243 Manresa (Barcelona)- Spain
T. +34 938 330 252
hidracar@hidracar.com
www.hidracar.com

DATA SHEET	REFERENCE:	REV:	DATE:	DRAWN	APPROVED
CALIBRATION POT	CP.AI.IN.DOC	00	SEP-26	P.BASCOMPTA	M.CARCARÉ

HIDRACAR S.A.
Pol.Ind.Bufalvent C/Ramon Farguell 73-77
08243 Manresa (Barcelona)- Spain
T. +34 938 330 252
hidracar@hidracar.com
www.hidracar.com

DATA SHEET	REFERENCE:	REV:	DATE:	DRAWN	APPROVED
CHARGING AND CONTROL GAS BLOCK FOR OUR PULSATION DAMPENERS AND ACCUMULATORS	BV(***)AX#M	09	JUN-25	P.BASCOMPTA	E.CORTINA

NOTE: The scale range of the pressure gauge should be approxymately 30% higher than the value of the pre-charge.

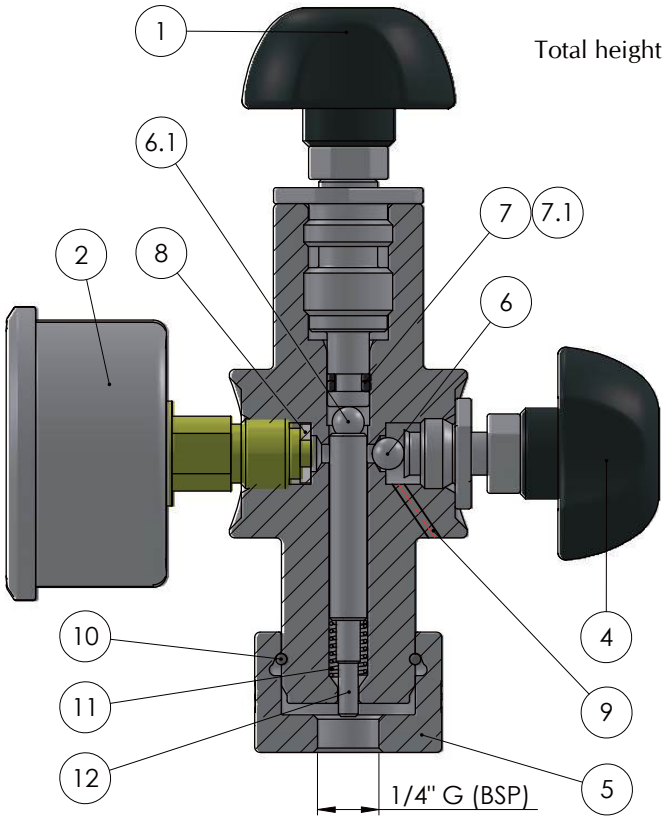

SECTION A-A

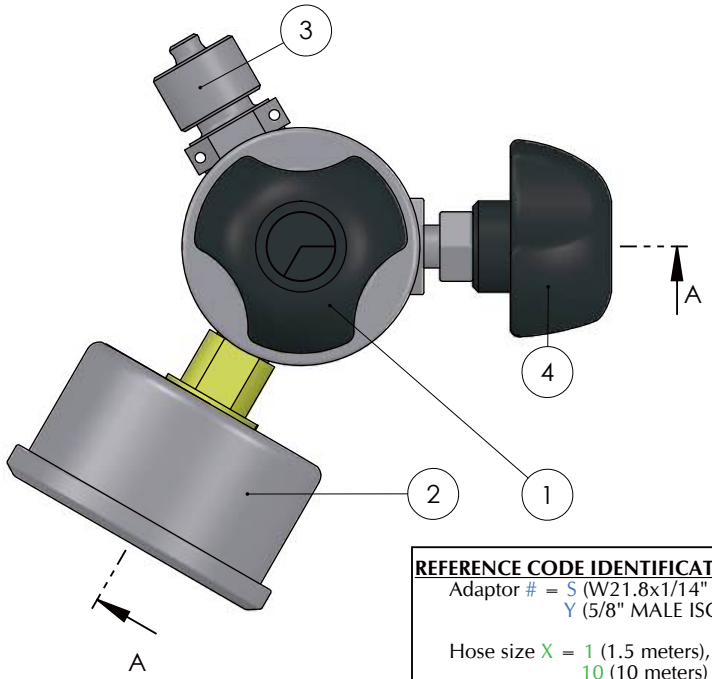

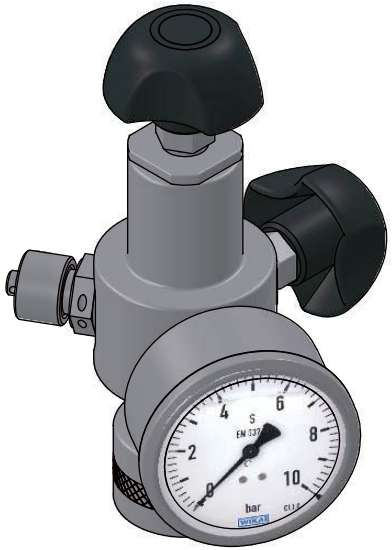

PRESSURE GAUGE SCALE RANGE	GAS BLOCK REFERENCE CODE
2.5 bar	BV002AX#M
6 bar	BV006AX#M
10 bar	BV010AX#M
16 bar	BV016AX#M
25 bar	BV025AX#M
40 bar	BV040AX#M
60 bar	BV060AX#M
100 bar	BV100AX#M
160 bar	BV160AX#M
250 bar	BV250AX#M
300 bar	BV300AX#M
400 bar	BV400AX#M
600 bar	BV600AX#M
1000 bar	BV1000AX#M/E

REFERENCE CODE IDENTIFICATION

Adaptor # = S (W21.8x1/14" FEMALE), T (W24.3x1/14" FEMALE), Y (5/8" MALE ISO 228) or Z (W21.8x1/14" MALE)

Hose size X = 1 (1.5 meters), 2 (2.5 meters), 3 (3 meters), 5 (5 meters) or 10 (10 meters)

Nº	ITEM
1	DAMPENER/ACCUMULATOR CHARGING VALVE CORE DRIVER HANDLE
2	PRESSURE GAUGE (WITH SCALE RANGE ACCORDING TO MAXIMUM CHARGING PRESSURE
3	CHARGING VALVE FOR GAS HOSE CONNECTION (1/4" BSP)
4	GAS PURGE RELEASE HANDLE
5	KNURLED RING NUT FOR FIXATION TO DAMPENER/ACCUMULATOR CHARGING VALVES
6	PURGE SHUTTER BALL VALVE
6.1	TRANSFER BALL
7	O-RING (ref.: HC2008-N)
7.1	BACK UP RING (ref.: HC8008-N)
8	PRESSURE GAUGE SEAL
9	PURGE GAS EXHAUST HOLE
10	RETAINING RING
11	SPRING
12	PIN FOR DAMPENER/ACCUMULATOR CORE VALVE OPENING
13	HOSE WITH 1/4" BSP CONNECTION AND SELECTED CONNECTION TO N2 BOTTLE

HIDRACAR S.A.
Pol.Ind.Bufalvent C/Ramon Farguell 73-77
08243 Manresa (Barcelona)- Spain
T. +34 938 330 252
hidracar@hidracar.com
www.hidracar.com

DATA SHEET	REFERENCE:	REV:	DATE:	DRAWN	APPROVED
BLADDER DISMANTLING TOOL	DRB.A/B	01	JUN-25	P.BASCOMPTA	E.CORTINA

FOR U060-U250
BLADDER SIZES

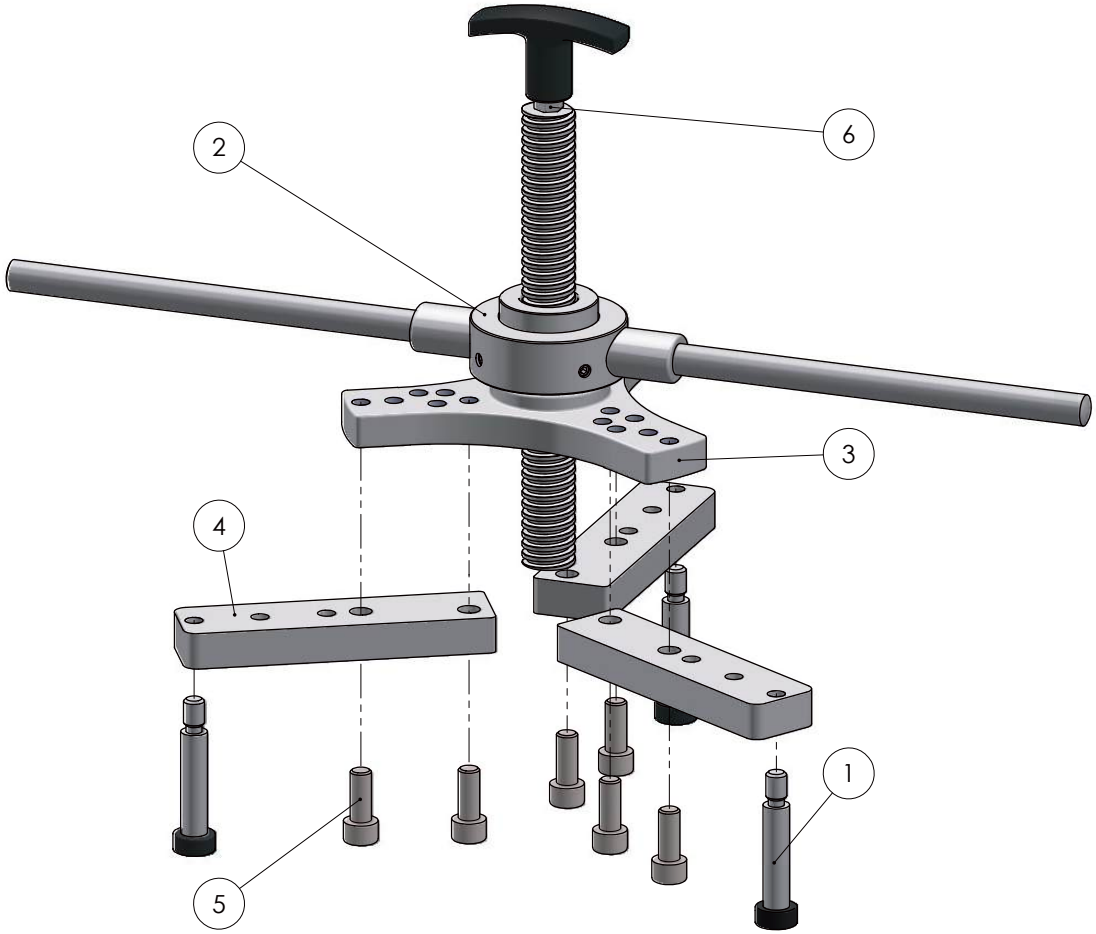

FOR U000-U040
BLADDER SIZES

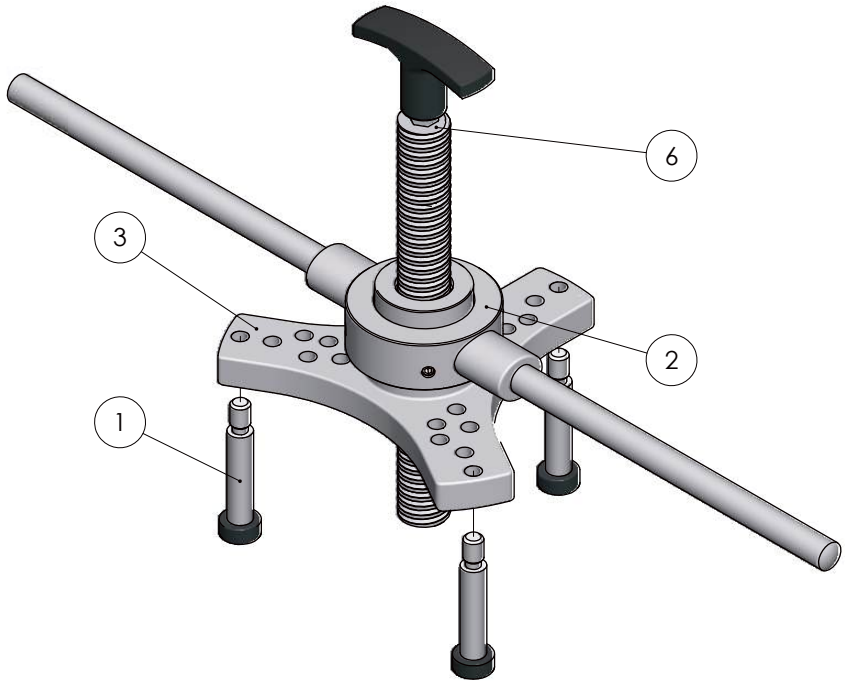

Nº	ITEM	QT.	MATERIAL
1	Legs M8 x 60	3	Carbon steel Ni plated
2	Extraction arms	1	Carbon steel Ni plated
3	Body extractor	1	Carbon steel Ni plated
4	Extendors	3	Carbon steel Ni plated
5	Bolts M8 x 20	6	DIN 912 A4-70
6	Handle with threaded shaft	1	Carbon steel Ni plated

HIDRACAR S.A.
Pol.Ind.Bufalvent C/Ramon Farguell 73-77
08243 Manresa (Barcelona)- Spain
T. +34 938 330 252
hidracar@hidracar.com
www.hidracar.com

DATA SHEET VACUUM KIT	REFERENCE: BV-VAC	REV: 01	DATE: FEB-26	DRAWN P.BASCOMPTA	APPROVED E.CORTINA

This **Vacuum Kit** is designed for use with our pulsation dampeners. It allows to create a vacuum inside the dampener, enabling operation at sub-atmospheric pressures.

The kit is supplied ready for units equipped with the **Vg8** (004-AI-BP) valve. For dampeners without this valve, the kit includes our **ADACNEU.5** adaptor.

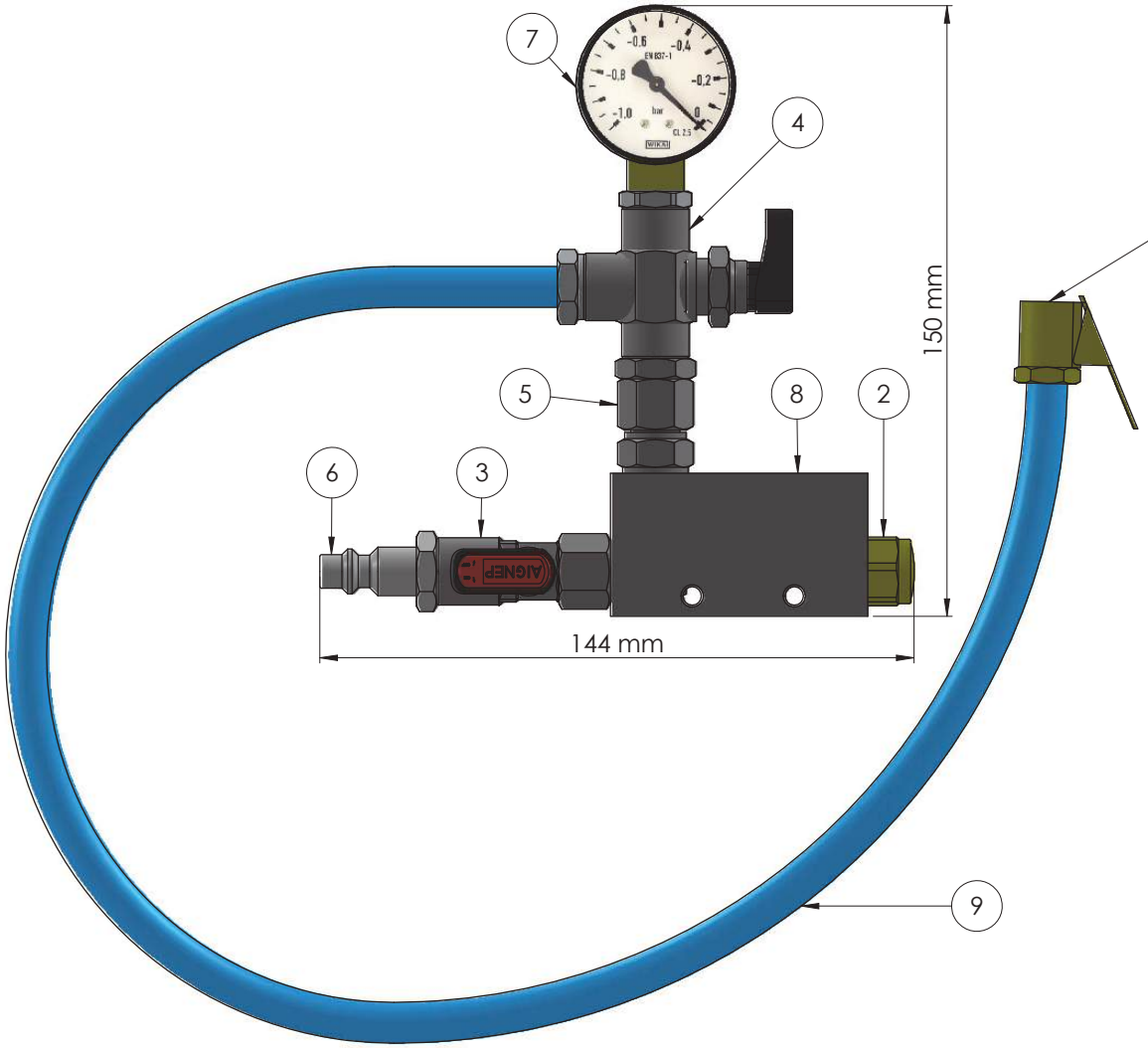

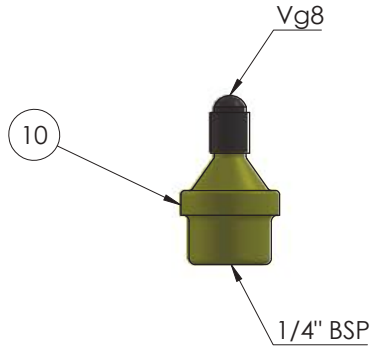

Maximum pressure: 6 bar-g
Maximum vacuum: -0.85 bar-g

Nº	ITEM	MATERIAL
1	Vg8 quick connector	Brass
2	Sound filter	Brass
3	Flow air control valve	Nickel plated brass/plastic
4	Check control valve	Nickel plated brass/plastic
5	Swivel fitting	Nickel plated brass
6	ISO 6150 adaptor	Nickel plated brass
7	Vacuum gauge	Brass/plastic
8	Venturi vacuum ejector	Aluminium
9	Tube 8 x 500 mm	Polyurethane
10	ADACNEU.5 (1/4"BSP to Vg8)	Brass

HIDRACAR S.A.

GAS CHARGING VALVE THREAD ADAPTOR

ADAPTADOR DE ROSCA PARA VÁLVULA DE CARGA DE GAS

ADACNEU.5

Adapts the thread of 1/4" BSP standard charging valves to the thread of the Vg8 valves so a tyre inflating kit can be used for charging with compressed air.

Adapta la rosca de las válvulas de carga estándar BSP de 1/4" a las de las válvulas Vg8 para poder cargar con aire comprimido, mediante la utilización de un kit de hinchado de neumáticos.

HIDRACAR S.A.
Pol. Ind. Bufalvent - c/ Ramón Farguell, 73-77
08243 Manresa (Barcelona) - SPAIN
www.hidracar.com • E-mail: hidracar@hidracar.com
Tel.: +34 93 833 02 52 Fax: +34 93 833 19 50

HIDRACAR S.A.

STAINLESS STEEL "T" ADAPTER WITH PRESSURE GAUGE

ADAPTADOR EN "T" CON MANÓMETRO EN ACERO INOXIDABLE

BT#A-AI

"T" adapter with pressure gauge

Adaptador en "T" con manómetro

BT#A-AI + 004-AI

"T" adapter with pressure gauge and charging valve

Adaptador en "T" con manómetro y válvula de carga

Pressure gauge casing and "T" adapter made of stainless steel.

Carcasa del manómetro y adaptador en "T" de acero inoxidable.

600 bar adapter design pressure.

Presión de diseño del adaptador de 600 bar.

Pressure gauges available for pressures (#) of: 6, 10, 16, 25, 40, 60, 100, 160, 250, 300, 400 and 600 bar.

Manómetros disponibles para presiones (#) de: 6, 10, 16, 25, 40, 60, 100, 160, 250, 300, 400 600 bar.

Brass pressure gauge connection.

Conexión del manómetro de latón.

HIDRACAR S.A.
Pol. Ind. Bufalvent - c/ Ramón Farguell, 73
08243 Manresa (Barcelona) - SPAIN
Tel.: +34 93 833 02 52 • www.hidracar.com
E-mail: hidracar@hidracar.com

HIDRACAR S.A.

SISTEMA DE SEGURIDAD ANTI-EXPLOSIÓN (*) POR INCENDIO MEDIANTE FUSIBLE DE TEMPERATURA

FIRE OVERPRESSURE EXPLOSION RISK PREVENTION (*) TEMPERATURE FUSE SAFETY SYSTEM

FST-AI/PD

(*) Our pulsation dampeners are designed with a minimum safety coefficient of 4:1.

(*) Nuestros amortiguadores de pulsaciones están diseñados con un coeficiente de seguridad mínimo de 4:1.

Releases the gas inside the accumulator when the surrounding temperature reaches160 ºC; and this way relieves the internal pressure and prevents the risk of explosion.

The same fuse is suitable for pressures between 10 bar and 1,000 bar.

Permite que el gas del interior del acumulador escape al exterior cuando la temperatura ambiente alcanza los 160 ºC; y así alivia la presión interior y evita una potencial explosión.

El mismo fusible sirve para presiones desde 10 ba hasta 1,000 bar.

HIDRACAR S.A.
Pol. Ind. Bufalvent - c/ Ramón Farguell, 73-77
08243 Manresa (Barcelona) - SPAIN
www.hidracar.com • E-mail: hidracar@hidracar.com
Tel.: +34 93 833 02 52 Fax: +34 93 833 19 50

HIDRACAR S.A.

TOOL FOR A QUICK EXTRACTION OF THE BLADDER FROM ACCUMULATORS

DRB.A/B

HERRAMIENTA DE EXTRACCIÓN RÁPIDA DE LA VEJIGA DE LOS ACUMULADORES

Suitable for the whole range of our bladder type accumulators, except for U350.

Para toda la gama de nuestros acumuladores de vejiga, excepto el U350.

Enables bladder extraction without being necessary to disconnect the accumulator from the circuit.

Permite extraer la vejiga sin necesidad de desmontar el acumulador del circuito.

HIDRACAR S.A.
Pol. Ind. Bufalvent - c/ Ramón Farguell, 73-77
08243 Manresa (Barcelona) - SPAIN
www.hidracar.com • E-mail: hidracar@hidracar.com
Tel.: +34 93 833 02 52 Fax: +34 93 833 19 50

HIDRACAR S.A.

ANTI-CORROSION VALVE

Prevents that, when a corrosive liquid is circulating through the circuit, and in case the separator element (bladder, membrane or bellows) of the dampener gets broken, the corrosive liquid could corrode the stainless steel gas charging valve and escape to the exterior.

This anti-corrosion valve is supplied together with the standard gas charging valve.

004-AI + PVDF

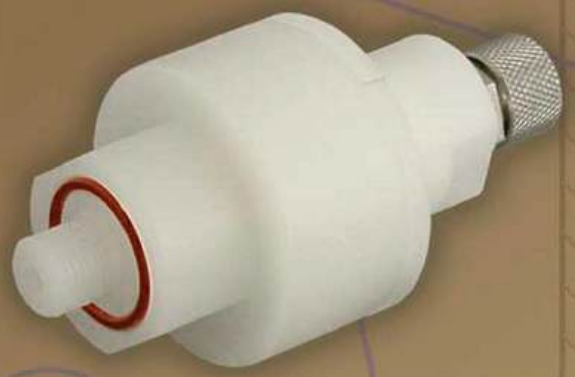

VÁLVULA ANTI-CORROSIÓN

Evita que, cuando por el circuito circula un líquido corrosivo, y en caso de rotura del elemento separador (vejiga, membrana o fuelle) del amortiguador, el líquido pueda corroer la válvula de carga de gas de acero inoxidable y fugar al exterior.

Esta válvula anti-corrosión se suministra conjuntamente con la válvula de carga de gas estándar.

HIDRACAR S.A.
Pol. Ind. Bufalvent - c/ Ramón Farguell, 73-77
08243 Manresa (Barcelona) - SPAIN
www.hidracar.com • E-mail: hidracar@hidracar.com
Tel.: +34 93 833 02 52 Fax: +34 93 833 19 50

ACCESSORY FOR CHARGING, PURGING AND VERIFYING THE PRESSURE OF OUR PULSATION DAMPENERS

HIDRACAR S.A.

ACCESORIO DE CARGA, PURGADO Y VERIFICACIÓN DE LA PRESIÓN DE NUESTROS AMORTIGUADORES DE PULSACIONES

ADAPTADOR "S"
(W21.8x1/14" HEMBRA)
"S" ADAPTER
(W21.8x1/14" FEMALE)

ADAPTADOR "T"
(W24.3x1/14" HEMBRA)
"T" ADAPTER
(W24.3x1/14" FEMALE)

ADAPTADOR "Y"
(5/8" ISO 228)
"Y" ADAPTER

ADAPTADOR "Z"
(W21.8x1/14" MACHO)
"Z" ADAPTER
(W21.8x1/14" MALE)

BV#A1TM

Supplied with optional pressure gauges and connection hose adapter (S, T, Y or Z); as well as a connection hose for either low and medium pressures or for high pressures (600 and 1,000 bar) as required.

Se suministra con manómetros y adaptador de conexión (S, T, Y o Z) opcionales; así como con manguera de conexión para presiones bajas y medias o para presiones altas (600 y 1.000 bar) según el rango de presiones que se precise.

Range of available pressures (#):
2.5, 6, 10, 16, 25, 40, 60, 100, 160, 250, 300, 400, 600 and 1,000 bar.

Rango de presiones (#) disponibles:
2.5, 6, 10, 16, 25, 40, 60, 100, 160, 250, 300, 400, 600 y 1.000 bar.

HIDRACAR S.A.
Pol. Ind. Bufalvent - c/ Ramón Farguell, 73-77
08243 Manresa (Barcelona) - SPAIN
www.hidracar.com • E-mail: hidracar@hidracar.com
Tel.: +34 93 833 02 52 Fax: +34 93 833 19 50

Courtesy of **Geveke Werktuigbouw B.V.**

Courtesy of **Sera Tecnología Iberia, S.L.**

Courtesy of **Exakta, a division of Seko group.**

Courtesy of **Prominent Systems spol, S.R.O**

Courtesy of **Ecochem Pumps L.T.D.**

Courtesy of **Iberfluid Instruments, S.A.**

Our pulsation dampeners are being used in the chemical and petrochemical industry in more than 70 countries.

HIDRACAR S.A.

Pol. Ind. Bufalvent, C/ Ramón Farguell 73-77
08243 MANRESA (Barcelona) · Spain

Tel.: +34 938 330 252 · Fax: +34 938 331 950
www.hidracar.com · hidracar@hidracar.com